Industrial Ethernet
IE-XR-RJ45/RJ45-2

Weidmüller Interface GmbH & Co. KG
Klingenbergstraße 26
D-32758 Detmold
Germany
Fon: +49 5231 14-0
Fax: +49 5231 14-292083
www.weidmueller.com

IE plug-in connectors, IP20, for copper and fibre optic cables

General ordering data

Type	IE-XR-RJ45/RJ45-2
Order No.	8952950000
Version	Mounting flange, Cat.6$_A$ / Class E$_A$ (ISO/IEC 11801 2010), IP20
GTIN (EAN)	4032248744329
Qty.	24 pc(s).

Industrial Ethernet
IE-XR-RJ45/RJ45-2

Weidmüller Interface GmbH & Co. KG
Klingenbergstraße 26
D-32758 Detmold
Germany
Fon: +49 5231 14-0
Fax: +49 5231 14-292083
www.weidmueller.com

Technical data

Dimensions and weights

Net weight	21.333 g

Temperatures

Operating temperature, max.	70 °C	Operating temperature, min.	-40 °C
Operating temperature	-40 °C...70 °C		

Environmental Product Compliance

REACH SVHC	Lead 7439-92-1

General data

Housing main material	Zinc diecast	Category	Cat.6$_A$ / Class E$_A$ (ISO/IEC 11801 2010)
Protection degree	IP20	Insertion force	≤ 30 N
Plugging cycles	750		

Electrical properties

Contact resistance	≤ 20 mΩ	Current-carrying capacity at 50 °C	1 A
Dielectric strength, contact / contact	≥ 1000 V DC	Dielectric strength, contact / shield	≤ 1500 V DC
Insulation strength	> 500 MΩ	PoE / PoE+	conforming to IEEE 802.3at

General standards

Connector standard	IEC 60603-7-5

Classifications

ETIM 6.0	EC001121	ETIM 7.0	EC001121
eClass 9.0	27-44-03-90	eClass 9.1	27-44-03-90
eClass 10.0	27-44-03-90		

Approvals

Approvals	EAC
ROHS	Conform

Downloads

Brochure/Catalogue	CAT 9 IETH 18/19 EN FL FIELDWIRING EN PI PROFINET CABLING EN
Engineering Data	STEP
User Documentation	MAN IE GUIDE DE MAN IE GUIDE EN

Industrial Ethernet
IE-XR-RJ45/RJ45-2

Weidmüller Interface GmbH & Co. KG
Klingenbergstraße 26
D-32758 Detmold
Germany
Fon: +49 5231 14-0
Fax: +49 5231 14-292083
www.weidmueller.com

Drawings

Dimensioned drawing

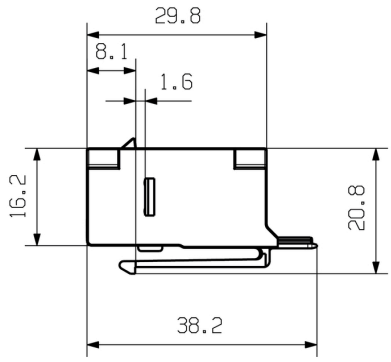

Dimensioned drawing

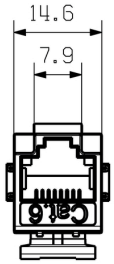
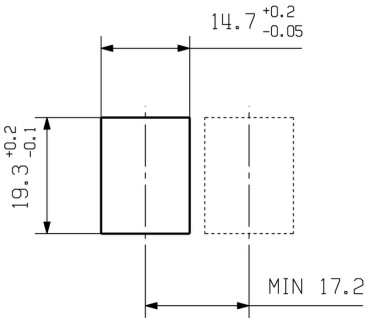
Installation cut-out