RIDERSERIES RCM
RCMKITP-I 230VAC 2CO LD

Weidmüller Interface GmbH & Co. KG
Klingenbergstraße 26
D-32758 Detmold
Germany
Fon: +49 5231 14-0
Fax: +49 5231 14-292083
www.weidmueller.com

Product image

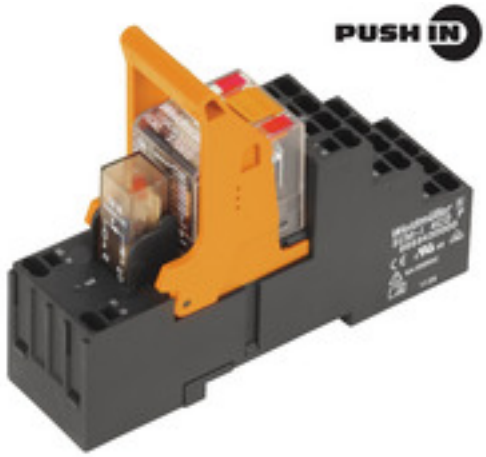

Similar to illustration

Modular system comprised of:
- relay socket for rail mounting
- LED indicator unit
- retaining clip
- plug-in relay
- markers

General ordering data

Type	RCMKITP-I 230VAC 2CO LD
Order No.	8921110000
Version	RIDERSERIES RCM, Relay module, Number of contacts: 2 CO contact with test button AgNi 90/10, Rated control voltage: 230 V AC, Continuous current: 12 A, PUSH IN
GTIN (EAN)	4032248692323
Qty.	10 pc(s).

Creation date May 1, 2020 5:14:49 AM CEST

RIDERSERIES RCM
RCMKITP-I 230VAC 2CO LD

Weidmüller Interface GmbH & Co. KG
Klingenbergstraße 26
D-32758 Detmold
Germany
Fon: +49 5231 14-0
Fax: +49 5231 14-292083
www.weidmueller.com

Technical data

Dimensions and weights

Width	28 mm	Width (inches)	1.102 inch
Height	98 mm	Height (inches)	3.858 inch
Depth	78.3 mm	Depth (inches)	3.083 inch
Net weight	87.6 g		

Temperatures

Humidity	40 °C / 93 % rel. humidity, no condensation	Operating temperature, max.	70 °C
Operating temperature, min.	-40 °C	Storage temperature, max.	70 °C
Storage temperature, min.	-40 °C	Operating temperature	-40 °C...70 °C
Storage temperature	-40 °C...70 °C		

Environmental Product Compliance

REACH SVHC	Lead 7439-92-1

Input

Rated control voltage	230 V AC	Rated current AC	4.3 mA
Power rating	1.0 VA	Pull-in/drop-out voltage, typ.	184 V / 69 V AC
Coil resistance	19465 Ω ± 15 %	Status indicator	red LED

Output

Rated switching voltage	240 V AC	Max. switching voltage, AC	400 V
Continuous current	12 A	Inrush current	24 A / 20 ms
AC switching capacity (resistive), max.	3000 VA	DC switching capacity (resistive), max.	288 W @ 24 V
Switch-on delay	≤ 15 ms	Switch-off delay	≤ 10 ms
Min. switching power	1 mA @ 24 V, 10 mA @ 12 V, 100 mA @ 5 V	Max. switching frequency at rated load	0.1 Hz

Contact data

Contact type	2 CO contact with test button (AgNi 90/10)	Mechanical service life	AC coil 20 x 10^6 switching cycles, DC coil 30 x 10^6 switching cycles

General data

Rail	TS 35	Test button	yes (lockable)
Mechanical switch position indicator	Yes	Colour	black

Insulation coordination

Rated voltage	250 V	Surge voltage category	III
Pollution severity	2	Insulating material group	IIIa
Protection degree	IP20	Dielectric strength, Input/Output	2.5 kV_{eff} / 1 Min.
Creepage and clearance distance input – output	≥ 4 mm	Dielectric strength of neighbouring contacts	2.5 kV_{eff} / 1 Min.
Dielectric strength of open contact	1.2 kV_{eff} /1 min.	Impulse withstand voltage	5 kV (1.2/50 µs)

RIDERSERIES RCM
RCMKITP-I 230VAC 2CO LD

Weidmüller Interface GmbH & Co. KG
Klingenbergstraße 26
D-32758 Detmold
Germany
Fon: +49 5231 14-0
Fax: +49 5231 14-292083
www.weidmueller.com

Technical data

Further details of approvals / standards

Standards	DIN EN 50178	Certificate no. (CSA) relay	249409-2426937
Certificate no. (CSA) base	249409-2295474	Certificate No. (DNVGL)	TAA000011A
Certificate no. (cURus) relay	E224238	Certificate no. (cURus) base	E223759

Connection data

Wire connection method	PUSH IN	Stripping length, rated connection	12 mm
Clamping range, rated connection	1.5 mm²	Clamping range, min.	0.75 mm²
Clamping range, max.	1.5 mm²	Wire cross-section, solid, min.	0.75 mm²
Wire cross-section, solid, max.	1.5 mm²	Wire connection cross-section, finely stranded, min.	0.75 mm²
Wire connection cross section, finely stranded, max.	1.5 mm²	Wire cross-section, finely stranded, max. (AWG)	AWG 16
Wire connection cross-section, finely stranded with wire-end ferrules DIN 46228/4, min.	0.75 mm²	Wire connection cross-section, finely stranded with wire-end ferrules DIN 46228/4, max.	0.75 mm²
Conductor cross-section, flexible, AEH (DIN 46228-1), min.	0.75 mm²	Conductor cross-section, flexible, AEH (DIN 46228-1), max.	1 mm²
Blade size	0.6 x 3.5 mm		

Classifications

ETIM 6.0	EC001437	ETIM 7.0	EC001437
eClass 9.0	27-37-16-01	eClass 9.1	27-37-16-01
eClass 10.0	27-37-16-01	UNSPSC	30-21-19-17

Approvals

Approvals	
ROHS	Conform

Downloads

Approval/Certificate/Document of Conformity	EU Konformitätserklärung / EU Declaration of Conformity
Brochure/Catalogue	CAT 4.2 ELECTR 18/19 EN
Engineering Data	EPLAN, WSCAD, Zuken E3.S
Engineering Data	STEP

RIDERSERIES RCM
RCMKITP-I 230VAC 2CO LD

Weidmüller Interface GmbH & Co. KG
Klingenbergstraße 26
D-32758 Detmold
Germany
Fon: +49 5231 14-0
Fax: +49 5231 14-292083
www.weidmueller.com

Drawings

Wiring diagram

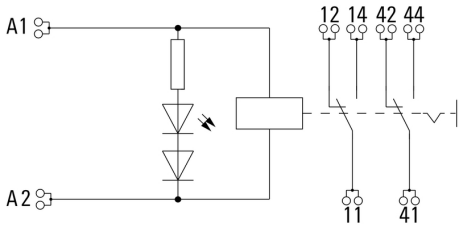

Graph

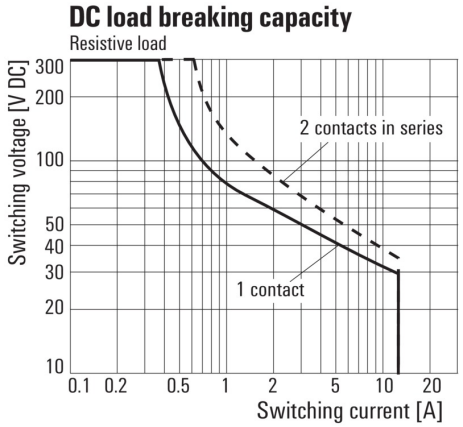

DC load limit curve
Resistive load

Graph

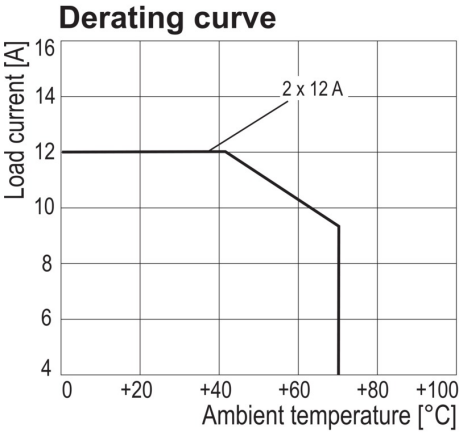

Derating curve
Relay in combination with base

Graph

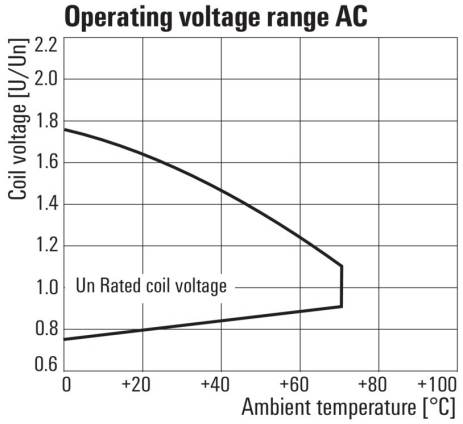

AC operational voltage range

Graph

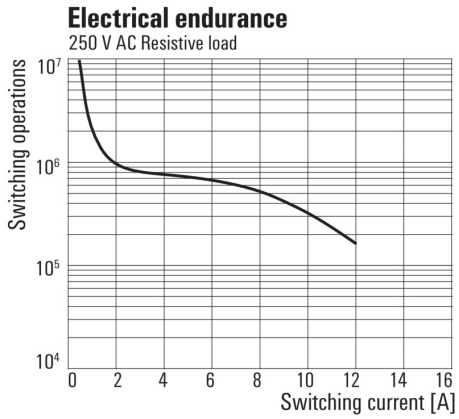

Electrical service life250 V AC resistive load
250 V AC resistive load

Dimensional drawing

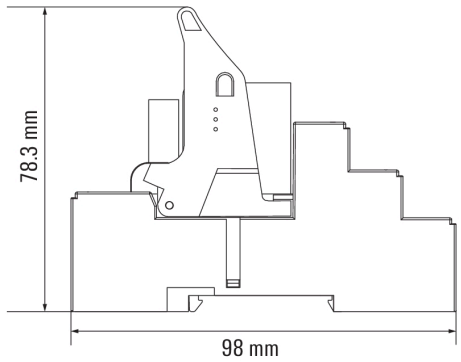

RIDERSERIES RCM
RCMKITP-I 230VAC 2CO LD

Weidmüller Interface GmbH & Co. KG
Klingenbergstraße 26
D-32758 Detmold
Germany
Fon: +49 5231 14-0
Fax: +49 5231 14-292083
www.weidmueller.com

Accessories

LED

Pluggable protective modules for the RIDERSERIES RCI / RCM relay base, with optional protective functions.

- With either green or red LED
- For UC supply voltage

General ordering data

Type	RIM-I 3 110/230VUC GN	Version
Order No.	8869660000	RIDERSERIES, LED module, Rated control voltage: 110...230 V UC,
GTIN (EAN)	4032248614721	Plug-in connection
Qty.	10 pc(s).	
Type	RIM-I 3 110/230VUC	Version
Order No.	8869650000	RIDERSERIES, LED module, Rated control voltage: 110...230 V UC,
GTIN (EAN)	4032248614592	Plug-in connection
Qty.	10 pc(s).	

Plastic retaining clip

Plastic retaining clip for RIDERSERIES RCM relays

General ordering data

Type	SCM-I CLIP P	Version
Order No.	8869440000	RIDERSERIES RCM, Retaining clip
GTIN (EAN)	4032248614295	
Qty.	10 pc(s).	

RIDERSERIES RCM
RCMKITP-I 230VAC 2CO LD

Weidmüller Interface GmbH & Co. KG
Klingenbergstraße 26
D-32758 Detmold
Germany
Fon: +49 5231 14-0
Fax: +49 5231 14-292083
www.weidmueller.com

Accessories

Blank

ESG is the tried-and-tested marker in MultiCard format for use on many well-known electrical devices. The result is high-quality device marking with a high-contrast appearance.
Various types are available for devices from the following manufacturers:
- Siemens
- Télémecanique
- ABB
- Beckhoff
- Lumberg
- Tags for all-purpose usage; self-adhesive or clip-on tags, depending on the type

Advantages at a glance:
- Tags for universal usage, self-adhesive or clip-on tags, depending on type
- For aligned equipment, e.g. circuit breakers, we supply ESG markers for clipping onto tag rails
- Individual laser-quality printing according to specifications

For custom printing: Please send us a file of our labeling software M-Print PRO or M-Print PRO Online (without installation) for your labeling specifications.

Please note that these markers are not intended for printing with the SpeedMarking laser.

General ordering data

Type	ESG 6/17 K MC NE GE	Version
Order No.	1880110000	ESG, Device markers x 17 mm, PA 66, Colour: yellow, Self-adhesive
GTIN (EAN)	4032248478798	
Qty.	200 pc(s).	
Type	ESG 6/17 K MC NE WS	Version
Order No.	1880120000	ESG, Device markers x 17 mm, PA 66, Colour: white, Self-adhesive
GTIN (EAN)	4032248478804	
Qty.	200 pc(s).	

RIDERSERIES RCM
RCMKITP-I 230VAC 2CO LD

Weidmüller Interface GmbH & Co. KG
Klingenbergstraße 26
D-32758 Detmold
Germany
Fon: +49 5231 14-0
Fax: +49 5231 14-292083
www.weidmueller.com

Accessories

Cross-connection for base with PUSH IN connection

Weidmüller RIDERSERIES relays guarantee a noise-free, decoupled signal transmission in industrial automation concepts.
The are compact, quickly installed and can be fitted in the tightest of spaces.

- 2, 3 or 4 CO contacts
- optionally: AC or DC coils
- Relay with test button and integrated status display and/or free-wheel diode
- Optionally with hard gold plated 4 CO contacts
- pluggable LED modules with protective functions
- Metal and plastic retaining clips
- Base with screw / PUSH IN connection

General ordering data

Type	SCM-I QV P	Version
Order No.	8870850000	RIDERSERIES RCM, Cross-connector
GTIN (EAN)	4032248631698	
Qty.	10 pc(s).	

LED / Protective varistor

Pluggable protective modules for the RIDERSERIES RCI / RCM relay base, with optional protective functions.

- With protective varistor
- For UC supply voltage

General ordering data

Type	RIM-I 4 230VUC VAR	Version
Order No.	8869750000	RIDERSERIES, Protective varistor, Rated control voltage: 230 V UC,
GTIN (EAN)	4032248606368	Plug-in connection
Qty.	10 pc(s).	

RIDERSERIES RCM
RCMKITP-I 230VAC 2CO LD

Weidmüller Interface GmbH & Co. KG
Klingenbergstraße 26
D-32758 Detmold
Germany
Fon: +49 5231 14-0
Fax: +49 5231 14-292083
www.weidmueller.com

Accessories

Blank

ESG is the tried-and-tested marker in MultiCard format for use on many well-known electrical devices. The result is high-quality device marking with a high-contrast appearance.
Various types are available for devices from the following manufacturers:
- Siemens
- Télémecanique
- ABB
- Beckhoff
- Lumberg
- Tags for all-purpose usage; self-adhesive or clip-on tags, depending on the type

Advantages at a glance:
- Tags for universal usage, self-adhesive or clip-on tags, depending on type
- For aligned equipment, e.g. circuit breakers, we supply ESG markers for clipping onto tag rails
- Individual laser-quality printing according to specifications

For custom printing: Please send us a file of our labeling software M-Print PRO or M-Print PRO Online (without installation) for your labeling specifications.

Please note that these markers are not intended for printing with the SpeedMarking laser.

General ordering data

Type	ESG 6/15 K MC NE GE	Version
Order No.	1880130000	ESG, Device markers x 15 mm, PA 66, Colour: yellow, Self-adhesive
GTIN (EAN)	4032248478910	
Qty.	200 pc(s).	
Type	ESG 6/15 K MC NE WS	Version
Order No.	1880100000	ESG, Device markers x 15 mm, PA 66, Colour: white, Self-adhesive
GTIN (EAN)	4032248478781	
Qty.	200 pc(s).	

RIDERSERIES RCM
RCMKITP-I 230VAC 2CO LD

Weidmüller Interface GmbH & Co. KG
Klingenbergstraße 26
D-32758 Detmold
Germany
Fon: +49 5231 14-0
Fax: +49 5231 14-292083
www.weidmueller.com

Accessories

Metal retaining clip

Metal retaining clip for RIDERSERIES RCM relays

General ordering data

Type	SCM-I CLIP M	Version
Order No.	8869450000	RIDERSERIES RCM, Retaining clip
GTIN (EAN)	4032248614301	
Qty.	10 pc(s).	

Slotted screwdriver

VDE insulated screwdriver sets, for working on live parts up to 1000 V AC and 1500 V DC, DIN EN 60900. IEC 900. Each piece is "GS" safety tested. Blade made from fully hardened, high-alloy chromium-vanadium-molybdenum steel, gun-metal finish.

General ordering data

Type	SDIS SL 0.6X3.5X100	Version
Order No.	1274660000	Mounting tool, Blade width (B): 3.5 mm, Blade length: 100 mm, Blade
GTIN (EAN)	4050118072631	thickness (A): 0.6 mm
Qty.	1 pc(s).	

RIDERSERIES RCM
RCMKITP-I 230VAC 2CO LD

Weidmüller Interface GmbH & Co. KG
Klingenbergstraße 26
D-32758 Detmold
Germany
Fon: +49 5231 14-0
Fax: +49 5231 14-292083
www.weidmueller.com

Accessories

Slotted screwdriver

Slotted screwdriver with rounded blade SD DIN 5265, ISO 2380/2, output to DIN 5264, ISO 2380/1. ChromTop tip, SoftFinish grip

General ordering data

Type	SDS 0.6X3.5X100	Version
Order No.	9008330000	Screwdriver, Blade width (B): 3.5 mm, Blade length: 100 mm, Blade
GTIN (EAN)	4032248056286	thickness (A): 0.6 mm
Qty.	1 pc(s).	

Slotted screwdriver

VDE insulated slot-head screwdriver, SDI DIN 7437, ISO 2380/2, drive output acc. to DIN 5264, ISO 2380/1. SoftFinish grip

General ordering data

Type	SDIS 0.6X3.5X100	Version
Order No.	9008390000	Screwdriver, Blade width (B): 3.5 mm, Blade length: 100 mm, Blade
GTIN (EAN)	4032248056354	thickness (A): 0.6 mm
Qty.	1 pc(s).	

RIDERSERIES RCM
RCMKITP-I 230VAC 2CO LD

Weidmüller Interface GmbH & Co. KG
Klingenbergstraße 26
D-32758 Detmold
Germany
Fon: +49 5231 14-0
Fax: +49 5231 14-292083
www.weidmueller.com

Accessories

Protection module

Pluggable protective modules for the RIDERSERIES RCI / RCM relay base, with optional protective functions.

- Optionally with free-wheel diode, load resistor or RC filter

General ordering data

Type	RIM-I 3 230VAC RC	Version
Order No.	1172210000	RIDERSERIES, RC filter, Rated control voltage: 230 V UC, Plug-in
GTIN (EAN)	4032248964420	connection
Qty.	10 pc(s).	
Type	RIM-I 1 R 110/230V	Version
Order No.	8870830000	RIDERSERIES, Load, Rated control voltage: 110...230 V UC, Plug-in
GTIN (EAN)	4032248631674	connection
Qty.	10 pc(s).	
Type	RIM-I 1 6/230V	Version
Order No.	8869580000	RIDERSERIES, Free-wheeling diode, Rated control voltage: 6...230 V
GTIN (EAN)	4032248614523	DC, Plug-in connection
Qty.	10 pc(s).	
Type	RIM-I 3 110/230VAC RC	Version
Order No.	8869790000	RIDERSERIES, RC filter, Rated control voltage: 110...230 V UC, Plug-in
GTIN (EAN)	4032248606337	connection
Qty.	10 pc(s).	

Label (cannot be printed using PrintJet)

Weidmüller RIDERSERIES relays guarantee a noise-free, decoupled signal transmission in industrial automation concepts.
The are compact, quickly installed and can be fitted in the tightest of spaces.

- 2, 3 or 4 CO contacts
- optionally: AC or DC coils
- Relay with test button and integrated status display and/or free-wheel diode
- Optionally with hard gold plated 4 CO contacts
- pluggable LED modules with protective functions
- Metal and plastic retaining clips
- Base with screw / PUSH IN connection

General ordering data

Type	SCM-I MARK	Version
Order No.	8869460000	RIDERSERIES RCM, Label
GTIN (EAN)	4032248614417	
Qty.	10 pc(s).	

RIDERSERIES RCM
RCMKITP-I 230VAC 2CO LD

Weidmüller Interface GmbH & Co. KG
Klingenbergstraße 26
D-32758 Detmold
Germany
Fon: +49 5231 14-0
Fax: +49 5231 14-292083
www.weidmueller.com

Drawings

Correct handling PUSH IN connection

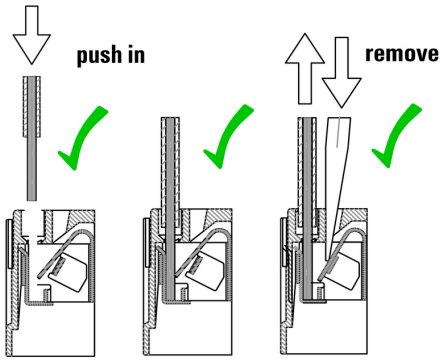

Wrong handling PUSH IN connection

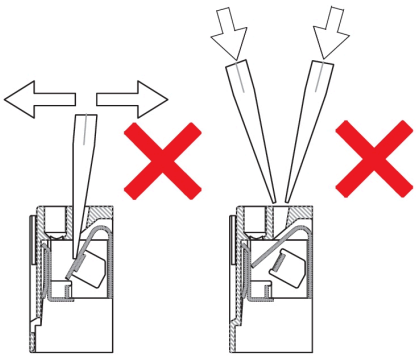
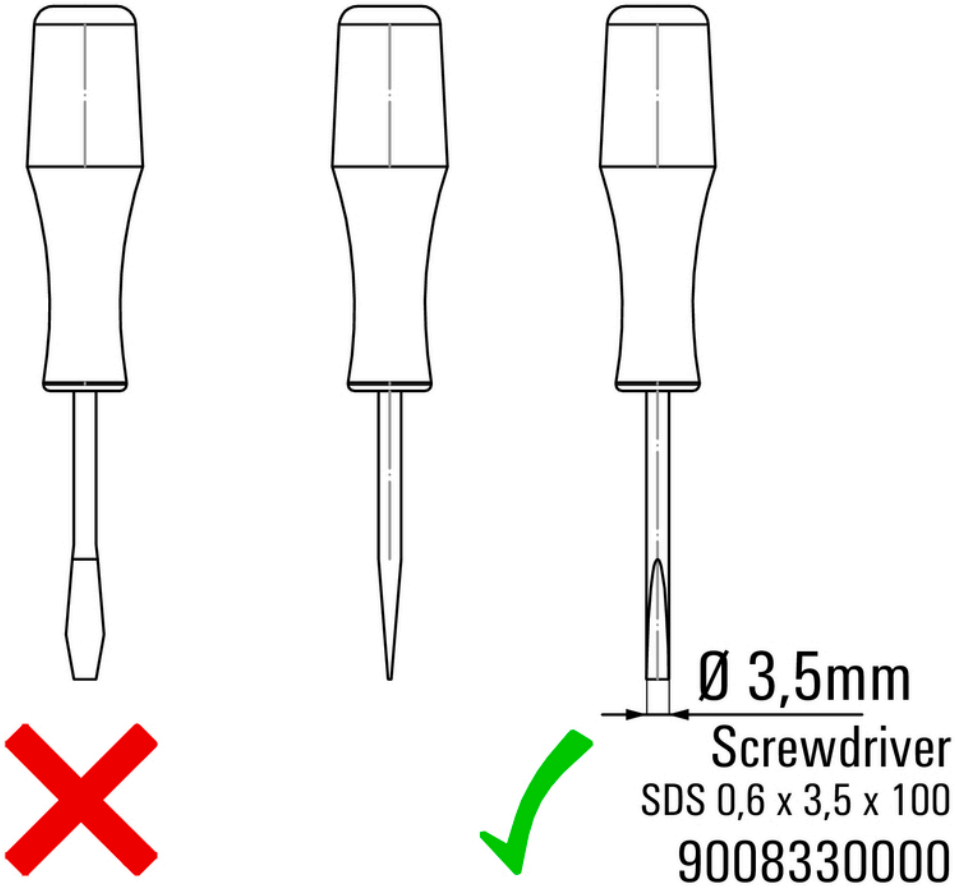
Recommended screwdriver