RIDERSERIES RCM
RCM580024

Weidmüller Interface GmbH & Co. KG
Klingenbergstraße 26
D-32758 Detmold
Germany
Fon: +49 5231 14-0
Fax: +49 5231 14-292083
www.weidmueller.com

Product image

Similar to illustration

Standard relays in the RIDERSERIES RCM
- 4 CO contacts
- Optionally AC or DC coils
- with test button
- With hard gold-plated contacts

General ordering data

Type	RCM580024
Order No.	8694460000
Version	RIDERSERIES RCM, Relay, Number of contacts: 4 CO contact with test button AgNi 5µm Au, Rated control voltage: 24 V DC, Continuous current: 6 A, Plug-in connection
GTIN (EAN)	4032248366163
Qty.	10 pc(s).

Creation date May 1, 2020 6:41:01 AM CEST

RIDERSERIES RCM
RCM580024

Weidmüller Interface GmbH & Co. KG
Klingenbergstraße 26
D-32758 Detmold
Germany
Fon: +49 5231 14-0
Fax: +49 5231 14-292083
www.weidmueller.com

Technical data

Dimensions and weights

Width	22.5 mm	Width (inches)	0.886 inch
Height	28 mm	Height (inches)	1.102 inch
Depth	29 mm	Depth (inches)	1.142 inch
Net weight	28.414 g		

Temperatures

Humidity	40 °C / 93 % rel. humidity, no condensation	Operating temperature, max.	70 °C
Operating temperature, min.	-40 °C	Storage temperature, max.	85 °C
Storage temperature, min.	-40 °C	Operating temperature	-40 °C...70 °C
Storage temperature	-40 °C...85 °C		

Rated data UL

Certificate No. (cURus)	E224238

Input

Rated control voltage	24 V DC	Rated current DC	31.3 mA
Power rating	750 mW	Pull-in/drop-out voltage, typ.	18 V / 2.4 V DC
Coil resistance	777 Ω ± 10 %		

Output

Rated switching voltage	240 V AC	Max. switching voltage, AC	240 V
Continuous current	6 A	Inrush current	12 A / 20 ms
AC switching capacity (resistive), max.	1500 VA	DC switching capacity (resistive), max.	144 W @ 24 V
Switch-on delay	≤ 15 ms	Switch-off delay	≤ 10 ms
Min. switching power	1 mA @ 1 V	Max. switching frequency at rated load	0.1 Hz

Contact data

Contact type	4 CO contact with test button (AgNi 5µm Au)	Mechanical service life	AC coil 20 x 10^6 switching cycles, DC coil 30 x 10^6 switching cycles

General data

Test button	yes (lockable)	Mechanical switch position indicator	Yes
Colour	Transparent	UL 94 flammability rating	V-2

Insulation coordination

Rated voltage	250 V	Surge voltage category	III
Pollution severity	2	Insulating material group	IIIa
Protection degree	IP20	Dielectric strength, Input/Output	2.5 kV_{eff} / 1 Min.
Creepage and clearance distance input – output	≥ 4 mm	Dielectric strength of neighbouring contacts	2 kV_{eff} / 1 min
Dielectric strength of open contact	1.2 kV_{eff} /1 min.	Impulse withstand voltage	5 kV (1.2/50 µs)

RIDERSERIES RCM
RCM580024

Weidmüller Interface GmbH & Co. KG
Klingenbergstraße 26
D-32758 Detmold
Germany
Fon: +49 5231 14-0
Fax: +49 5231 14-292083
www.weidmueller.com

Technical data

Further details of approvals / standards

Standards	IEC 61810-1, UL508	Certificate No. (CSA)	249409-2426937
Certificate No. (cURus)	E224238		

Connection data

Wire connection method	Plug-in connection

Classifications

ETIM 6.0	EC001437	ETIM 7.0	EC001437
eClass 9.0	27-37-16-01	eClass 9.1	27-37-16-01
eClass 10.0	27-37-16-01	UNSPSC	30-21-19-17

Approvals

Approvals	
ROHS	Conform

Downloads

Approval/Certificate/Document of Conformity	EU Konformitätserklärung / EU Declaration of Conformity
Brochure/Catalogue	CAT 4.2 ELECTR 18/19 EN
Engineering Data	EPLAN, WSCAD
Engineering Data	STEP

RIDERSERIES RCM
RCM580024

Weidmüller Interface GmbH & Co. KG
Klingenbergstraße 26
D-32758 Detmold
Germany
Fon: +49 5231 14-0
Fax: +49 5231 14-292083
www.weidmueller.com

Drawings

Wiring diagram

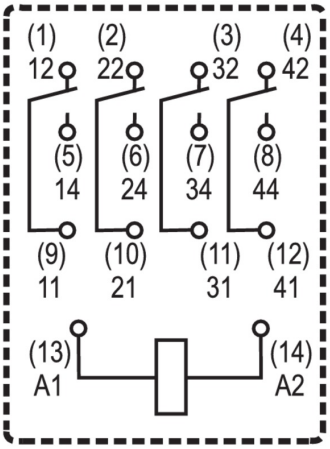

View of Pins from below

Graph

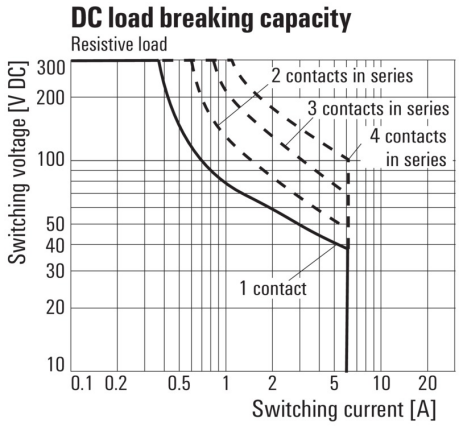

DC load limit curve
Resistive load

Graph

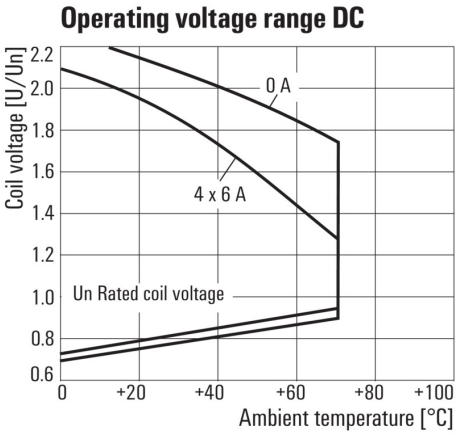

DC operational voltage range

Graph

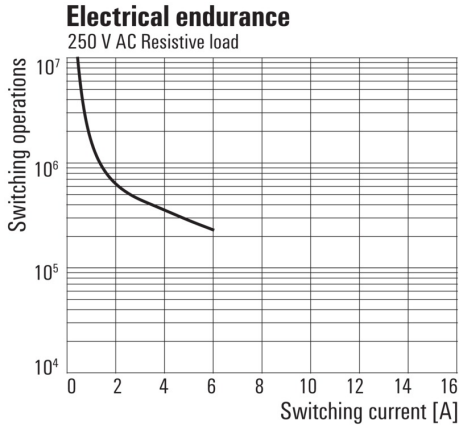

Electrical service life
250 V AC resistive load

Graph

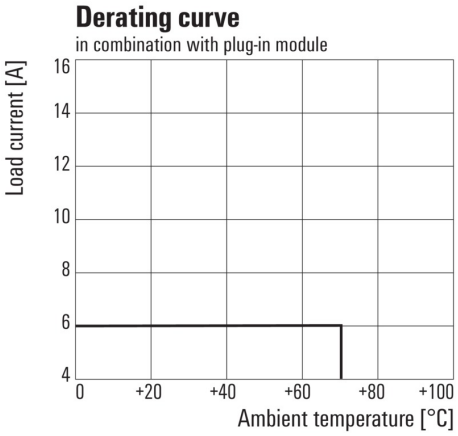

Derating curve
Relay in combination with base

Dimensional drawing

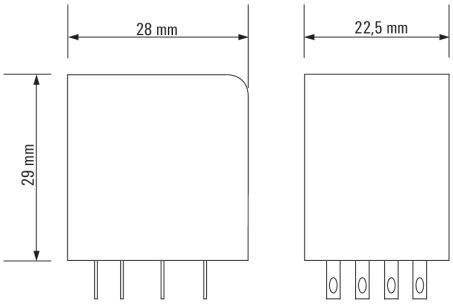

Creation date May 1, 2020 6:41:01 AM CEST

RIDERSERIES RCM
RCM580024

Weidmüller Interface GmbH & Co. KG
Klingenbergstraße 26
D-32758 Detmold
Germany
Fon: +49 5231 14-0
Fax: +49 5231 14-292083
www.weidmueller.com

Mating connector (fully pluggable)

Base

Relay base for RIDERSERIES RCM relays

- 2, 3 and 4 CO contacts
- Screw and PUSH IN wire connection
- Standard and low heights

General ordering data

Type	SCM-I 4CO P	Version
Order No.	8869430000	RIDERSERIES RCM, Relay bases, Number of contacts: 4 CO contact,
GTIN (EAN)	4032248614288	Continuous current: 6 A, PUSH IN
Qty.	10 pc(s).	
Type	SCM-I 4CO N	Version
Order No.	8869390000	RIDERSERIES RCM, Relay bases, Number of contacts: 4 CO contact,
GTIN (EAN)	4032248614257	Continuous current: 6 A, Screw connection
Qty.	10 pc(s).	
Type	SCM-I 4CO	Version
Order No.	8869420000	RIDERSERIES RCM, Relay bases, Number of contacts: 4 CO contact,
GTIN (EAN)	4032248614271	Continuous current: 6 A, Screw connection
Qty.	10 pc(s).	

RIDERSERIES RCM
RCM580024

Weidmüller Interface GmbH & Co. KG
Klingenbergstraße 26
D-32758 Detmold
Germany
Fon: +49 5231 14-0
Fax: +49 5231 14-292083
www.weidmueller.com

Accessories

LED

Pluggable protective modules for the RIDERSERIES RCI / RCM relay base, with optional protective functions.

- With either green or red LED
- For UC supply voltage

General ordering data

Type	RIM-I 3 6/24VUC	Version
Order No.	8869630000	RIDERSERIES, LED module, Rated control voltage: 6...24 V UC, Plug-in connection
GTIN (EAN)	4032248614578	
Qty.	10 pc(s).	
Type	RIM-I 3 24/60VUC	Version
Order No.	8869610000	RIDERSERIES, LED module, Rated control voltage: 24...60 V UC, Plug-in connection
GTIN (EAN)	4032248614554	
Qty.	10 pc(s).	
Type	RIM-I 3 6/24VUC GN	Version
Order No.	8869640000	RIDERSERIES, LED module, Rated control voltage: 6...24 V UC, Plug-in connection
GTIN (EAN)	4032248614585	
Qty.	10 pc(s).	
Type	RIM-I 3 24/60VUC GN	Version
Order No.	8869620000	RIDERSERIES, LED module, Rated control voltage: 24...60 V UC, Plug-in connection
GTIN (EAN)	4032248614561	
Qty.	10 pc(s).	

Plastic retaining clip

Plastic retaining clip for RIDERSERIES RCM relays

General ordering data

Type	SCM-I CLIP P	Version
Order No.	8869440000	RIDERSERIES RCM, Retaining clip
GTIN (EAN)	4032248614295	
Qty.	10 pc(s).	
Type	SCM-I CLIP N	Version
Order No.	8875620000	RIDERSERIES RCM, Retaining clip
GTIN (EAN)	4032248608577	
Qty.	10 pc(s).	

RIDERSERIES RCM
RCM580024

Weidmüller Interface GmbH & Co. KG
Klingenbergstraße 26
D-32758 Detmold
Germany
Fon: +49 5231 14-0
Fax: +49 5231 14-292083
www.weidmueller.com

Accessories

Cross-connection for base with PUSH IN connection

Weidmüller RIDERSERIES relays guarantee a noise-free, decoupled signal transmission in industrial automation concepts.
The are compact, quickly installed and can be fitted in the tightest of spaces.

- 2, 3 or 4 CO contacts
- optionally: AC or DC coils
- Relay with test button and integrated status display and/or free-wheel diode
- Optionally with hard gold plated 4 CO contacts
- pluggable LED modules with protective functions
- Metal and plastic retaining clips
- Base with screw / PUSH IN connection

General ordering data

Type	SCM-I QV P	Version
Order No.	8870850000	RIDERSERIES RCM, Cross-connector
GTIN (EAN)	4032248631698	
Qty.	10 pc(s).	

LED / free-wheel diode

Pluggable protective modules for the RIDERSERIES RCI / RCM relay base, with optional protective functions.

- With either green or red LED
- With free-wheel diode
- For DC supply voltage

General ordering data

Type	RIM-I 2 6/24VDC	Version
Order No.	8869590000	RIDERSERIES, LED module with freewheel diode, Rated control
GTIN (EAN)	4032248614530	voltage: 6...24 V DC, Plug-in connection
Qty.	10 pc(s).	
Type	RIM-I 2 24/60VDC	Version
Order No.	8869670000	RIDERSERIES, LED module with freewheel diode, Rated control
GTIN (EAN)	4032248614608	voltage: 24...60 V DC, Plug-in connection
Qty.	10 pc(s).	
Type	RIM-I 2 24/60VDC GN	Version
Order No.	8869680000	RIDERSERIES, LED module with freewheel diode, Rated control
GTIN (EAN)	4032248614615	voltage: 24...60 V DC, Plug-in connection
Qty.	10 pc(s).	
Type	RIM-I 2 6/24VDC GN	Version
Order No.	8869600000	RIDERSERIES, LED module with freewheel diode, Rated control
GTIN (EAN)	4032248614547	voltage: 6...24 V DC, Plug-in connection
Qty.	10 pc(s).	

RIDERSERIES RCM
RCM580024

Weidmüller Interface GmbH & Co. KG
Klingenbergstraße 26
D-32758 Detmold
Germany
Fon: +49 5231 14-0
Fax: +49 5231 14-292083
www.weidmueller.com

Accessories

LED / Protective varistor

Pluggable protective modules for the RIDERSERIES RCI / RCM relay base, with optional protective functions.

- With protective varistor
- For UC supply voltage

General ordering data

Type	RIM-I 4 24VUC VAR	Version
Order No.	8869710000	RIDERSERIES, Protective varistor, Rated control voltage: 24 V UC, Plug-in connection
GTIN (EAN)	4032248606344	
Qty.	10 pc(s).	

Cross-connection for base with screw connection

You place stringent demands on your relay combinations in
industrial environments. Our D-SERIES relay modules were
designed specifically for challenging industrial applications.
Let's connect.
In many industrial applications voltages between 110 and 220 V
are used to control actuators. With load currents exceeding 100 mA
these high voltages produce arcing that causes a great deal of wear on the
relay contacts.
We have designed our D-SERIES relay modules specifically for universal usage
in a wide range of industrial applications. They are much more reliable
than conventional solutions, which minimises costs for maintenance and
replacement.
Thanks to series connected contacts, built-in blow magnets and low-wear
contacts, arcing is effectively
suppressed with D-SERIES products – resulting in a noticeably longer service life.

General ordering data

Type	SCM-I QV S	Version
Order No.	1132080000	RIDERSERIES RCM, Cross-connector
GTIN (EAN)	4032248912193	
Qty.	10 pc(s).	

RIDERSERIES RCM
RCM580024

Weidmüller Interface GmbH & Co. KG
Klingenbergstraße 26
D-32758 Detmold
Germany
Fon: +49 5231 14-0
Fax: +49 5231 14-292083
www.weidmueller.com

Accessories

Base

Relay base for RIDERSERIES RCM relays

- 2, 3 and 4 CO contacts
- Screw and PUSH IN wire connection
- Standard and low heights

General ordering data

Type	SCM-I 4CO P	Version
Order No.	8869430000	RIDERSERIES RCM, Relay bases, Number of contacts: 4 CO contact,
GTIN (EAN)	4032248614288	Continuous current: 6 A, PUSH IN
Qty.	10 pc(s).	
Type	SCM-I 4CO N	Version
Order No.	8869390000	RIDERSERIES RCM, Relay bases, Number of contacts: 4 CO contact,
GTIN (EAN)	4032248614257	Continuous current: 6 A, Screw connection
Qty.	10 pc(s).	
Type	SCM-I 4CO	Version
Order No.	8869420000	RIDERSERIES RCM, Relay bases, Number of contacts: 4 CO contact,
GTIN (EAN)	4032248614271	Continuous current: 6 A, Screw connection
Qty.	10 pc(s).	

Metal retaining clip

Metal retaining clip for RIDERSERIES RCM relays

General ordering data

Type	SCM-I CLIP M	Version
Order No.	8869450000	RIDERSERIES RCM, Retaining clip
GTIN (EAN)	4032248614301	
Qty.	10 pc(s).	

RIDERSERIES RCM
RCM580024

Weidmüller Interface GmbH & Co. KG
Klingenbergstraße 26
D-32758 Detmold
Germany
Fon: +49 5231 14-0
Fax: +49 5231 14-292083
www.weidmueller.com

Accessories

Protection module

Pluggable protective modules for the RIDERSERIES RCI / RCM relay base, with optional protective functions.

- Optionally with free-wheel diode, load resistor or RC filter

General ordering data

Type	RIM-I 1 6/230V	Version
Order No.	8869580000	RIDERSERIES, Free-wheeling diode, Rated control voltage: 6...230 V
GTIN (EAN)	4032248614523	DC, Plug-in connection
Qty.	10 pc(s).	

Label (cannot be printed using PrintJet)

Weidmüller RIDERSERIES relays guarantee a noise-free, decoupled signal transmission in industrial automation concepts.
The are compact, quickly installed and can be fitted in the tightest of spaces.

- 2, 3 or 4 CO contacts
- optionally: AC or DC coils
- Relay with test button and integrated status display and/or free-wheel diode
- Optionally with hard gold plated 4 CO contacts
- pluggable LED modules with protective functions
- Metal and plastic retaining clips
- Base with screw / PUSH IN connection

General ordering data

Type	SCM-I MARK	Version
Order No.	8869460000	RIDERSERIES RCM, Label
GTIN (EAN)	4032248614417	
Qty.	10 pc(s).	

RIDERSERIES RCM
RCM580024

Weidmüller Interface GmbH & Co. KG
Klingenbergstraße 26
D-32758 Detmold
Germany
Fon: +49 5231 14-0
Fax: +49 5231 14-292083
www.weidmueller.com

Drawings

Miscellaneous

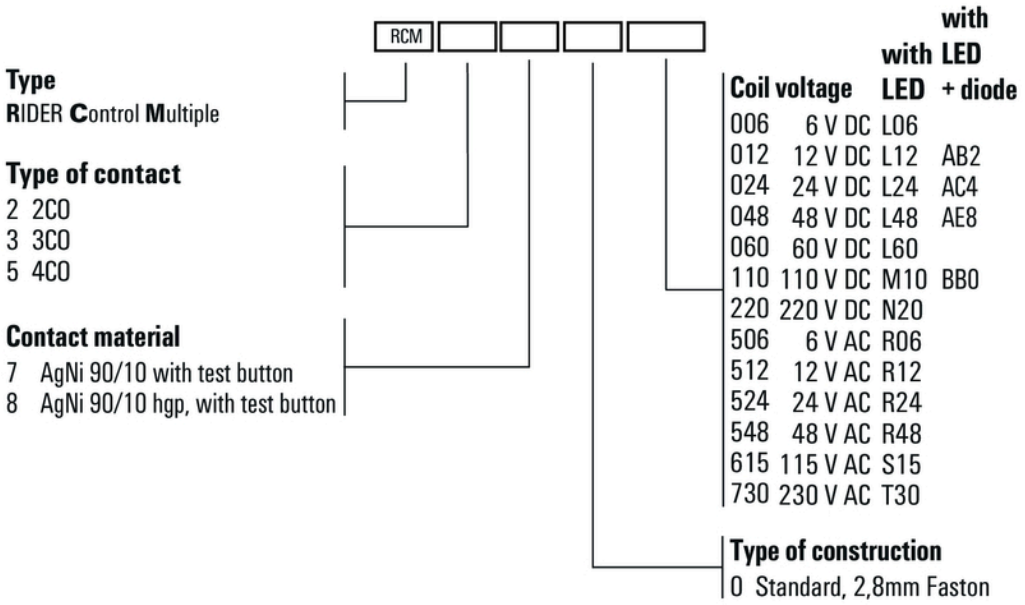

Type codes