# OMNIMATE Power - series BV/SV 7.62HP
# SV 7.62HP/08/90MSF5 3.5SN BK BX

**Weidmüller Interface GmbH & Co. KG**
Klingenbergstraße 26
D-32758 Detmold
Germany
Fon: +49 5231 14-0
Fax: +49 5231 14-292083
www.weidmueller.com

Single-row, high-current and high-performance male headers for side-by-side mounting without sacrificing any poles or with flange for fast fixing without tools. Maximum connection and operating reliability thanks to a mating profile that prevents incorrect connection, unique coding diversity and additional fastening in the flange.

## General ordering data

| | |
|---|---|
| Type | SV 7.62HP/08/90MSF5 3.5SN BK BX |
| Order No. | 2474130000 |
| Version | PCB plug-in connector, male header, closed side, Middle screw flange, THT solder connection, 7.62 mm, Number of poles: 8, 180°, Solder pin length (l): 3.5 mm |
| GTIN (EAN) | 4050118485929 |
| Qty. | 24 pc(s). |
| Product data | IEC: 1000 V / 57 A<br>UL: 300 V / 40.5 A |

Creation date May 2, 2020 12:29:46 PM CEST

# OMNIMATE Power - series BV/SV 7.62HP
# SV 7.62HP/08/90MSF5 3.5SN BK BX

**Weidmüller Interface GmbH & Co. KG**
Klingenbergstraße 26
D-32758 Detmold
Germany
Fon: +49 5231 14-0
Fax: +49 5231 14-292083
www.weidmueller.com

## Technical data

### Dimensions and weights

| | |
|---|---|
| Net weight | 15.504 g |

### System specifications

| | | | |
|---|---|---|---|
| Product family | OMNIMATE Power - series BV/SV 7.62HP | Type of connection | Board connection |
| Mounting onto the PCB | THT solder connection | Pitch in mm (P) | 7.62 mm |
| Pitch in inches (P) | 0.3 inch | Outgoing elbow | 180° |
| Number of poles | 8 | Number of solder pins per pole | 2 |
| Solder pin length (l) | 3.5 mm | Solder pin length tolerance | +0.1 / -0.3 mm |
| Solder pin dimensions | 0.8 x 1.0 mm | Solder eyelet hole diameter (D) | 1.4 mm |
| Solder eyelet hole diameter tolerance (D) | + 0,1 mm | L1 in mm | 53.34 mm |
| L1 in inches | 2.1 inch | Pin series quantity | 2 |
| Touch-safe protection acc. to DIN VDE 57 106 | Touch-safe above the printed circuit board | Touch-safe protection acc. to DIN VDE 0470 | IP 20 |
| Volume resistance | 2.00 mΩ | Can be coded | Yes |
| Tightening torque for screw flange, min. | 0.2 Nm | Tightening torque for screw flange, max. | 0.3 Nm |
| Plugging cycles | 25 | | |

### Material data

| | | | |
|---|---|---|---|
| Insulating material | PA GF | Insulating material group | II |
| Comparative Tracking Index (CTI) | ≥ 500 | Insulation strength | ≥ $10^8$ Ω |
| UL 94 flammability rating | V-0 | GWFI | 960 °C |
| Contact material | Copper alloy | Layer structure of solder connection | 1-3 µm Ni / 4-6 µm Sn matt |
| Layer structure of plug contact | 1-3 µm Ni / 4-6 µm Sn matt | Storage temperature, min. | -25 °C |
| Storage temperature, max. | 50 °C | Max. relative humidity during storage | 70 % |
| Operating temperature, min. | -50 °C | Operating temperature, max. | 130 °C |
| Temperature range, installation, min. | -25 °C | Temperature range, installation, max. | 130 °C |

### Rated data acc. to IEC

| | | | |
|---|---|---|---|
| tested acc. to standard | IEC 60664-1, IEC 61984 | Rated current, min. number of poles (Tu=20°C) | 57 A |
| Rated current, max. number of poles (Tu=20°C) | 41 A | Rated current, min. number of poles (Tu=40°C) | 41 A |
| Rated current, max. number of poles (Tu=40°C) | 41 A | Rated voltage for surge voltage class / pollution degree II/2 | 1,000 V |
| Rated voltage for surge voltage class / pollution degree III/2 | 630 V | Rated voltage for surge voltage class / pollution degree III/3 | 630 V |
| Rated impulse voltage for surge voltage class/ pollution degree II/2 | 6 kV | Rated impulse voltage for surge voltage class/ pollution degree III/2 | 6 kV |
| Rated impulse voltage for surge voltage class/ contamination degree III/3 | 6 kV | Short-time withstand current resistance | 3 x 1s with 420 A |
| Clearance, min. | 6.9 mm | Creepage distance, min. | 9.6 mm |

### Rated data acc. to CSA

| | | | |
|---|---|---|---|
| Rated voltage (Use group B / CSA) | 300 V | Rated voltage (Use group C / CSA) | 300 V |
| Rated voltage (Use group D / CSA) | 600 V | Rated current (Use group B / CSA) | 35 A |
| Rated current (Use group C / CSA) | 35 A | Rated current (Use group D / CSA) | 5 A |

# OMNIMATE Power - series BV/SV 7.62HP
# SV 7.62HP/08/90MSF5 3.5SN BK BX

**Weidmüller Interface GmbH & Co. KG**
Klingenbergstraße 26
D-32758 Detmold
Germany
Fon: +49 5231 14-0
Fax: +49 5231 14-292083
www.weidmueller.com

## Technical data

### Rated data acc. to UL 1059

| | | | |
|---|---|---|---|
| Rated voltage (Use group B / UL 1059) | 300 V | Rated voltage (Use group C / UL 1059) | 300 V |
| Rated voltage (Use group D / UL 1059) | 600 V | Rated current (Use group B / UL 1059) | 40.5 A |
| Rated current (Use group C / UL 1059) | 40.5 A | Rated current (Use group D / UL 1059) | 5 A |
| Clearance distance, min. | 6.9 mm | Creepage distance, min. | 9.6 mm |

### Packing

| | | | |
|---|---|---|---|
| VPE length | 350 mm | VPE width | 135 mm |
| VPE height | 35 mm | | |

### Classifications

| | | | |
|---|---|---|---|
| ETIM 6.0 | EC002637 | ETIM 7.0 | EC002637 |
| eClass 9.0 | 27-44-04-02 | eClass 9.1 | 27-44-04-02 |
| eClass 10.0 | 27-44-04-02 | | |

### Notes

| | |
|---|---|
| Notes | • Additional colours on request<br>• Rated current related to rated cross-section & min. No. of poles.<br>• P on drawing = pitch<br>• Rated data refer only to the component itself. Clearance and creepage distances to other components are to be designed in accordance with the relevant application standards.<br>• MFX and MSFX: X= Position of the middle flange e.g. MF2, MSF3 |
| IPC conformity | Conformity: The products are developed, manufactured and delivered according international recognized standards and norms and comply with the assured properties in the data sheet resp. fulfill decorative properties in accordance with IPC-A-610 "Class 2". Further claims on the products can be evaluated on request. |

### Downloads

| | |
|---|---|
| Brochure/Catalogue | FL DRIVES EN<br>FL DRIVES DE |
| Engineering Data | STEP |
| White paper power electronics connected correctly | Download Whitepaper |
| White paper UL 600 V | Download Whitepaper |

# OMNIMATE Power - series BV/SV 7.62HP
# SV 7.62HP/08/90MSF5 3.5SN BK BX

**Weidmüller Interface GmbH & Co. KG**
Klingenbergstraße 26
D-32758 Detmold
Germany
Fon: +49 5231 14-0
Fax: +49 5231 14-292083
www.weidmueller.com

## Drawings

### Dimensional drawing

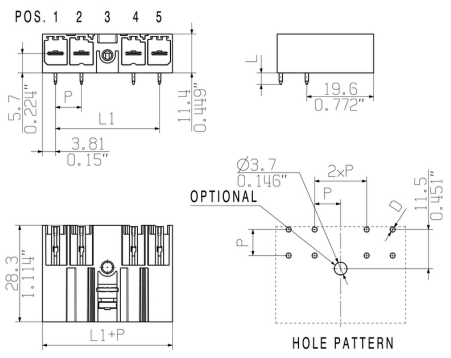


| | | | | | | | | |
|---|---|---|---|---|---|---|---|---|
| 6 | M(S)F6 | o | o | o | o | o | X | o |
| 6 | M(S)F5 | o | o | o | o | X | o | o |
| 6 | M(S)F4 | o | o | o | X | o | o | o |
| 6 | M(S)F3 | o | o | X | o | o | o | o |
| 6 | M(S)F2 | o | X | o | o | o | o | o |
| 5 | M(S)F5 | o | o | o | o | X | o | |
| 5 | M(S)F4 | o | o | o | X | o | o | |
| 5 | M(S)F3 | o | o | X | o | o | o | |
| 5 | M(S)F2 | o | X | o | o | o | o | |
| 4 | M(S)F4 | o | o | o | X | o | | |
| 4 | M(S)F3 | o | o | X | o | o | | |
| 4 | M(S)F2 | o | X | o | o | o | | |
| 3 | M(S)F3 | o | o | X | o | | | |
| 3 | M(S)F2 | o | X | o | o | | | |
| 2 | M(S)F2 | o | X | o | | | | |
| NO OF POLES | X = MIDDLE FLANGE POSITION | 1 | 2 | 3 | 4 | 5 | 6 | 7 |
| | | 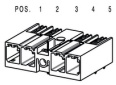 | | | | | | |

# OMNIMATE Power - series BV/SV 7.62HP
# SV 7.62HP/08/90MSF5 3.5SN BK BX

**Weidmüller Interface GmbH & Co. KG**
Klingenbergstraße 26
D-32758 Detmold
Germany
Fon: +49 5231 14-0
Fax: +49 5231 14-292083
www.weidmueller.com

## Accessories

### Coding elements

**Only connects what is supposed to be connected: the right connection at the right place.**
Coding elements and locking devices clearly assign connecting elements during the manufacturing process and operation
The coding elements and locking devices are inserted prior to assembly or during the cable assembly phase.
The Weidmüller alternative: configure online using the variant configurator to precode prior to delivery.
Incorrect assembly on the circuit board and incorrect plugging of connecting elements is no longer possible.
The advantage: no troubleshooting during manufacture and no operational errors by the user.

### General ordering data

| | | | | |
|---|---|---|---|---|
| Type | BV/SV 7.62HP KO | Version | Product data | Packaging |
| Order No. | 1937590000 | PCB plug-in connector, Accessories, Coding element, black, Number of poles: 1 | | Box |
| GTIN (EAN) | 4032248608881 | | | |
| Qty. | 50 pc(s). | | | |
| Type | VDS180 SV7.62 | Version | Product data | Packaging |
| Order No. | 1853940000 | PCB plug-in connector, Accessories, black, Number of poles: 1 | | Box |
| GTIN (EAN) | 4032248389513 | | | |
| Qty. | 50 pc(s). | | | |

# Recommended wave solderding profiles

**Weidmüller Interface GmbH & Co. KG**
Klingenbergstraße 16
D-32758 Detmold
Germany
Fon: +49 5231 14-0
Fax: +49 5231 14-292083
www.weidmueller.com

## Single Wave:

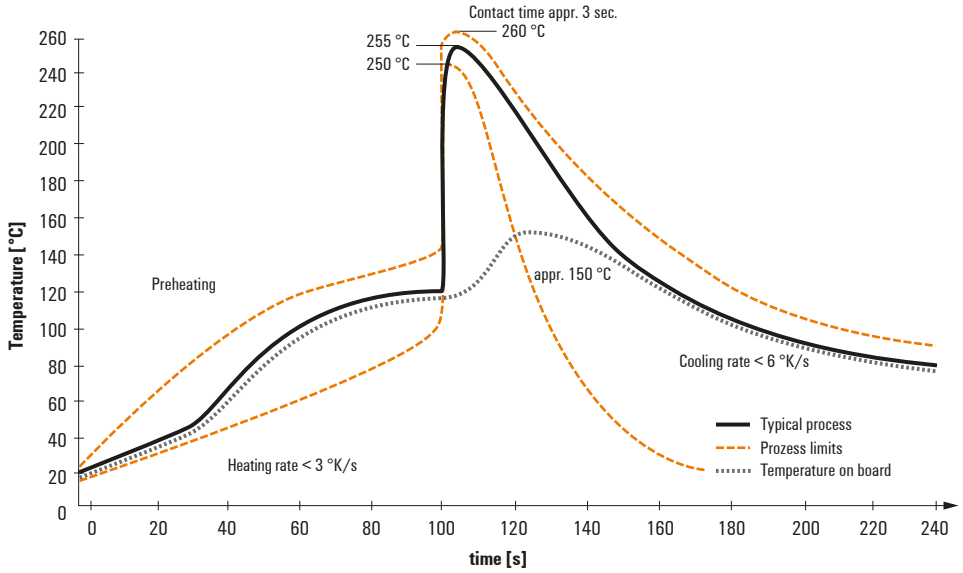


## Double Wave:

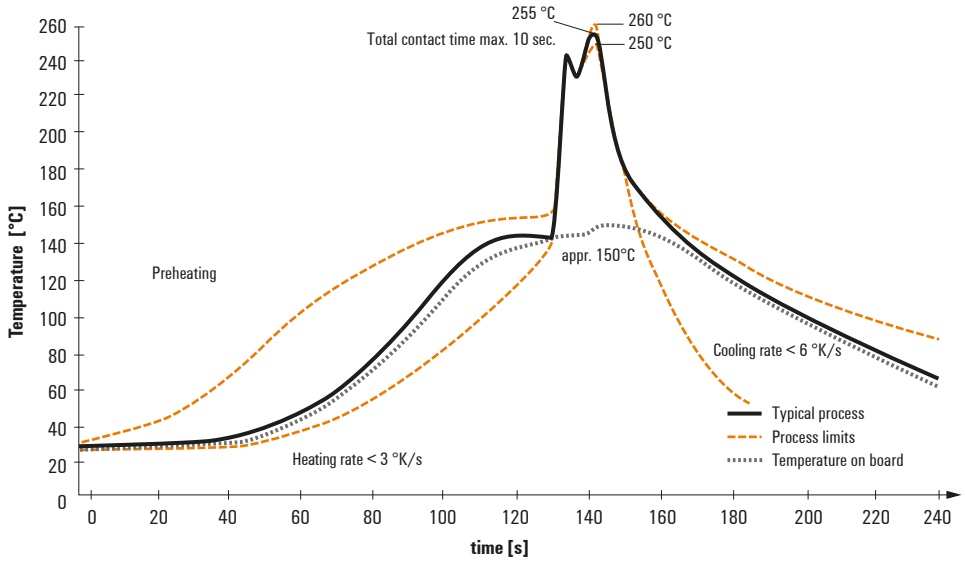


## Wave soldering profiles

Wired connection elements should be processed in accordance with the DIN EN 61760-1 standard. We have included two recommendations for practical wave soldering profiles, with which Weidmüller PCB terminals and connectors are qualified.

When choosing a suitable profile for your application, the following factors also need to be considered:
- PCB thickness
- Proportion of Cu in the layers
- Single/double-sided assembly
- Product range
- Heating and cooling rates

The single and double wave profiles each indicate the recommended operating range, including the maximum soldering temperature of 260°C. In practice, the maximum soldering temperature is quite often well below the above maximum profile.

We reserve the right to make technical changes.