ModuPlug
HDC XX5E01 MFSXXXX-2000

Weidmüller Interface GmbH & Co. KG
Klingenbergstraße 26
D-32758 Detmold
Germany
Fon: +49 5231 14-0
Fax: +49 5231 14-292083
www.weidmueller.com

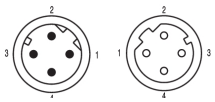

Compact

The new two-pole bus module is extremely compact and can accommodate both megabit and gigabit data inserts. It enables the connection of 2 Gigabit Cat 6A cables (10 gigabit) to one module.

General ordering data

Type	HDC XX5E01 MFSXXXX-2000
Order No.	2453552000
Version	Data use
GTIN (EAN)	4050118467499
Qty.	1 pc(s).

ModuPlug
HDC XX5E01 MFSXXXX-2000

Weidmüller Interface GmbH & Co. KG
Klingenbergstraße 26
D-32758 Detmold
Germany
Fon: +49 5231 14-0
Fax: +49 5231 14-292083
www.weidmueller.com

Technical data

Dimensions and weights

Net weight	0.001 g

Temperatures

Limit temperature	-30 °C ... 90 °C

Environmental Product Compliance

REACH SVHC	Lead 7439-92-1

General data

Module side version	Male	Opposite side version	Female, straight
Cable length	20 m	Category	Cat. 5e
Coding	D	Contact surface	Au (Gold)
Insulation strength	≥ 10^8 Ω	Number of poles	4
Plugging cycles	≥ 100	Pollution severity	2
Rated current	4 A	Rated voltage	250 V
Transmission rate	100 MBit/s	Type	Pin

Cable technical specifications

Cable length	20 m	Colour coding	white, yellow, blue, orange
Halogen	No	Insulation	PE
Outside diameter	6.5 mm ± 0.2	Sheath material	PUR
Sheathing colour	green	Shielded	Yes

Classifications

ETIM 6.0	EC002599	ETIM 7.0	EC002599
eClass 9.0	27-06-03-07	eClass 9.1	27-06-03-08
eClass 10.0	27-06-03-07		

Approvals

ROHS	Conform

Downloads

Engineering Data	STEP

ModuPlug
HDC XX5E01 MFSXXXX-2000

Weidmüller Interface GmbH & Co. KG
Klingenbergstraße 26
D-32758 Detmold
Germany
Fon: +49 5231 14-0
Fax: +49 5231 14-292083
www.weidmueller.com
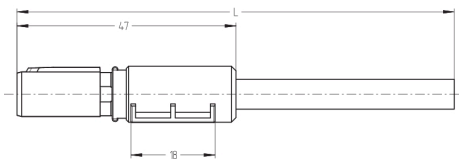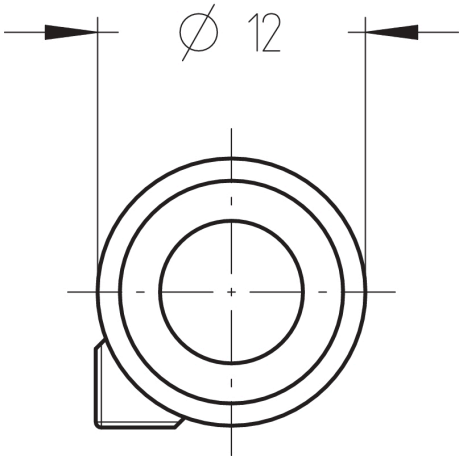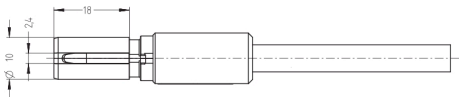
Drawings