OMNIMATE Signal - series BC/SC 3.81
BCF 3.81/12/180LRZE SN OR BX

Weidmüller Interface GmbH & Co. KG
Klingenbergstraße 26
D-32758 Detmold
Germany
Fon: +49 5231 14-0
Fax: +49 5231 14-292083
www.weidmueller.com

Product image

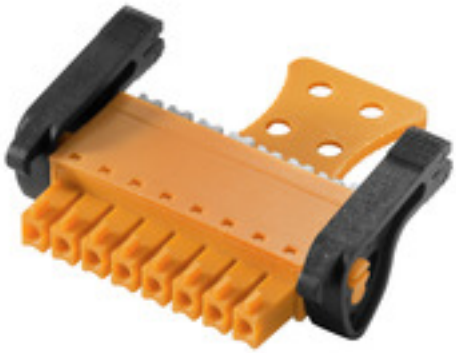

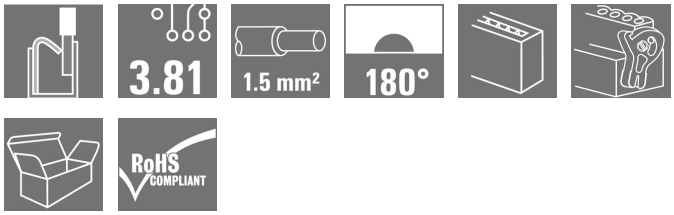

PUSH IN - Weidmüller's innovative connection system simplifies the wire connection process.
The benefits for users and applications:

- High packaging density due to very low component height. Simply insert the prepared wire - finished
- High component density with the compact SCDN / SCDN-THR two-tier pin header
- Simplified processing due to integrated push buttons for opening the clamping unit
- Intuitive handling – since the wire-entry area and handling area are clearly separated
- tool-free locking and releasing when using Weidmüller's patented release latch (LR)

The Weidmüller plug-in connectors, pitch 3.81 mm (0.15 inch), are compatible with the layout of customary plug-in connectors, can be coded and provide space for printing.

General ordering data

Type	BCF 3.81/12/180LRZE SN OR BX
Order No.	2443050000
Version	PCB plug-in connector, female plug, 3.81 mm, Number of poles: 12, 180°, PUSH IN, Tension-clamp connection, Clamping range, max. : 1.5 mm², Box
GTIN (EAN)	4050118542851
Qty.	50 pc(s).
Product data	IEC: 320 V / 17.5 A / 0.14 - 1.5 mm² UL: 300 V / 10 A / AWG 26 - AWG 16
Packaging	Box

OMNIMATE Signal - series BC/SC 3.81
BCF 3.81/12/180LRZE SN OR BX

Weidmüller Interface GmbH & Co. KG
Klingenbergstraße 26
D-32758 Detmold
Germany
Fon: +49 5231 14-0
Fax: +49 5231 14-292083
www.weidmueller.com

Technical data

Dimensions and weights

Width	56.31 mm	Width (inches)	2.217 inch
Height	15.09 mm	Height (inches)	0.594 inch
Depth	34.6 mm	Depth (inches)	1.362 inch
Net weight	10.94 g		

System Parameters

Product family	OMNIMATE Signal - series BC/SC 3.81	Type of connection	Field connection
Wire connection method	PUSH IN, Tension-clamp connection	Pitch in mm (P)	3.81 mm
Pitch in inches (P)	0.15 inch	Conductor outlet direction	180°
Number of poles	12	L1 in mm	41.91 mm
L1 in inches	1.65 inch	Number of rows	1
Pin series quantity	1	Rated cross-section	1 mm²
Touch-safe protection acc. to DIN VDE 57 106	Safe from finger touch	Touch-safe protection acc. to DIN VDE 0470	IP 20
Volume resistance	≤ 5mΩ	Can be coded	Yes
Stripping length	9 mm	Actuating force actuating element, max.	40 N
Screwdriver blade	0.4 x 2.5	Screwdriver blade standard	DIN 5264
Plugging cycles	25	Plugging force/pole, max.	8 N
Pulling force/pole, max.	7 N		

Material data

Insulating material	PA 66 GF 30	Colour	orange
Colour of operational elements	white	Material of operational elements	PPA GF
Colour chart (similar)	RAL 2000	Insulating material group	II
Comparative Tracking Index (CTI)	≥ 550	Insulation strength	≥ 10^8 Ω
UL 94 flammability rating	V-0	GWFI	960 °C
Contact material	Copper alloy	Contact surface	tinned
Layer structure of plug contact	4-8 µm Sn matt	Storage temperature, min.	-25 °C
Storage temperature, max.	50 °C	Max. relative humidity during storage	70 %
Operating temperature, min.	-50 °C	Operating temperature, max.	120 °C
Temperature range, installation, min.	-25 °C	Temperature range, installation, max.	120 °C

Conductors suitable for connection

Clamping range, min.	0.14 mm²
Clamping range, max.	1.5 mm²
Wire connection cross section AWG, min.	AWG 26
Wire connection cross section AWG, max.	AWG 16
Solid, min. H05(07) V-U	0.14 mm²
Solid, max. H05(07) V-U	1.5 mm²
Flexible, min. H05(07) V-K	0.14 mm²
Flexible, max. H05(07) V-K	1.5 mm²
w. plastic collar ferrule, DIN 46228 pt 4, min.	0.25 mm²
w. plastic collar ferrule, DIN 46228 pt 4, max.	1 mm²
w. wire end ferrule, DIN 46228 pt 1, min.	0.25 mm²
w. wire end ferrule, DIN 46228 pt 1, max.	1.5 mm²

OMNIMATE Signal - series BC/SC 3.81
BCF 3.81/12/180LRZE SN OR BX

Weidmüller Interface GmbH & Co. KG
Klingenbergstraße 26
D-32758 Detmold
Germany
Fon: +49 5231 14-0
Fax: +49 5231 14-292083
www.weidmueller.com

Technical data

Plug gauge in accordance with EN 60999 a x b; ø	2.4 mm x 1.5 mm; 1.9mm		
Clampable conductor	Cross-section for conductor connection	Type	fine-wired
		nominal	0.5 mm²
	wire end ferrule	Stripping length	nominal 12 mm
		Recommended wire-end ferrule	H0,5/16 OR
		Stripping length	nominal 10 mm
		Recommended wire-end ferrule	H0,5/10
	Cross-section for conductor connection	Type	fine-wired
		nominal	0.75 mm²
	wire end ferrule	Stripping length	nominal 12 mm
		Recommended wire-end ferrule	H0,75/16 W
		Stripping length	nominal 10 mm
		Recommended wire-end ferrule	H0,75/10
	Cross-section for conductor connection	Type	fine-wired
		nominal	1 mm²
	wire end ferrule	Stripping length	nominal 12 mm
		Recommended wire-end ferrule	H1,0/16D R
		Stripping length	nominal 10 mm
		Recommended wire-end ferrule	H1,0/10
	Cross-section for conductor connection	Type	fine-wired
		nominal	0.34 mm²
	wire end ferrule	Stripping length	nominal 10 mm
		Recommended wire-end ferrule	H0,34/12 TK
Reference text	The outside diameter of the plastic collar should not be larger than the pitch (P), Length of ferrules is to be chosen depending on the product and the rated voltage.		
Max. clamping range	1.5 mm²		

Rated data acc. to IEC

tested acc. to standard	IEC 60664-1, IEC 61984	Rated current, min. number of poles (Tu=20°C)	17.5 A
Rated current, max. number of poles (Tu=20°C)	17.5 A	Rated current, min. number of poles (Tu=40°C)	17.5 A
Rated current, max. number of poles (Tu=40°C)	16.3 A	Rated voltage for surge voltage class / pollution degree II/2	320 V
Rated voltage for surge voltage class / pollution degree III/2	160 V	Rated voltage for surge voltage class / pollution degree III/3	160 V
Rated impulse voltage for surge voltage class/ pollution degree II/2	2.5 kV	Rated impulse voltage for surge voltage class/ pollution degree III/2	2.5 kV
Rated impulse voltage for surge voltage class/ contamination degree III/3	2.5 kV	Short-time withstand current resistance	3 x 1s with 76 A

Rated data acc. to CSA

Rated voltage (Use group B / CSA)	300 V	Rated voltage (Use group C / CSA)	50 V
Rated voltage (Use group D / CSA)	300 V	Rated current (Use group B / CSA)	11 A
Rated current (Use group C / CSA)	11 A	Rated current (Use group D / CSA)	11 A
Wire cross-section, AWG, min.	AWG 26	Wire cross-section, AWG, max.	AWG 16

OMNIMATE Signal - series BC/SC 3.81
BCF 3.81/12/180LRZE SN OR BX

Weidmüller Interface GmbH & Co. KG
Klingenbergstraße 26
D-32758 Detmold
Germany
Fon: +49 5231 14-0
Fax: +49 5231 14-292083
www.weidmueller.com

Technical data

Rated data acc. to UL 1059

Institute (cURus)		Certificate No. (cURus)	E60693
Rated voltage (Use group B / UL 1059)	300 V	Rated voltage (Use group D / UL 1059)	300 V
Rated current (Use group B / UL 1059)	10 A	Rated current (Use group D / UL 1059)	10 A
Wire cross-section, AWG, min.	AWG 26	Wire cross-section, AWG, max.	AWG 16
Reference to approval values	Specifications are maximum values, details - see approval certificate.		

Packing

Packaging	Box	VPE length	0 m
VPE width	0 m	VPE height	0 m

Classifications

ETIM 6.0	EC002638	ETIM 7.0	EC002638
eClass 9.0	27-44-03-09	eClass 9.1	27-44-03-09
eClass 10.0	27-44-03-09		

Notes

Notes	• Additional colours on request • Rated current related to rated cross-section & min. No. of poles. • P on drawing = pitch • Conductors suitable for connection: 1.5 mm² with wire-end ferrule with plastic collar, DIN 46 228/1, with a rated voltage of 125V/2.5 kV with III/3 or 250 V/2.5 kV with II/2 • Crimp shape A for wire-end ferrules with crimping tools PZ 1,5 (order no. 9005990000) or PZ 6/5 (order no. 9011460000) for larger wire cross-sections recommended. • Wire end ferrule without plastic collar to DIN 46228/1 • Wire end ferrule with plastic collar to DIN 46228/4 • Rated data refer only to the component itself. Clearance and creepage distances to other components are to be designed in accordance with the relevant application standards. • The test point can only be used as potential-pickup point.
IPC conformity	Conformity: The products are developed, manufactured and delivered according international recognized standards and norms and comply with the assured properties in the data sheet resp. fulfill decorative properties in accordance with IPC-A-610 "Class 2". Further claims on the products can be evaluated on request.

Approvals

Approvals	
ROHS	Conform

Creation date May 2, 2020 3:14:03 PM CEST

OMNIMATE Signal - series BC/SC 3.81
BCF 3.81/12/180LRZE SN OR BX

Weidmüller Interface GmbH & Co. KG
Klingenbergstraße 26
D-32758 Detmold
Germany
Fon: +49 5231 14-0
Fax: +49 5231 14-292083
www.weidmueller.com

Technical data

Downloads

Approval/Certificate/Document of Conformity	CB Certificate CB Testreport
Engineering Data	STEP
White paper PUSH IN wire connection	Download Whitepaper

OMNIMATE Signal - series BC/SC 3.81
BCF 3.81/12/180LRZE SN OR BX

Weidmüller Interface GmbH & Co. KG
Klingenbergstraße 26
D-32758 Detmold
Germany
Fon: +49 5231 14-0
Fax: +49 5231 14-292083
www.weidmueller.com

Drawings

Product benefits

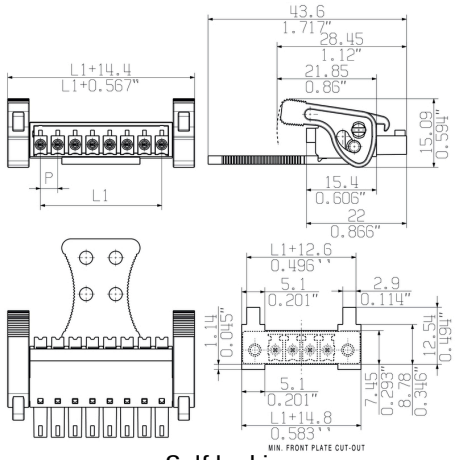

Self-locking
Immediately on plugging in

Graph

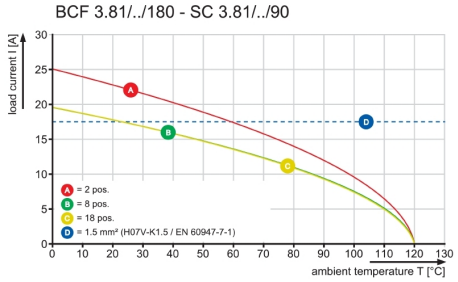

Graph

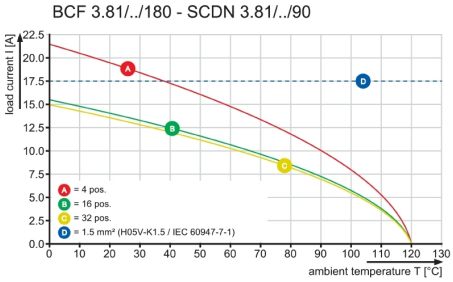

Graph

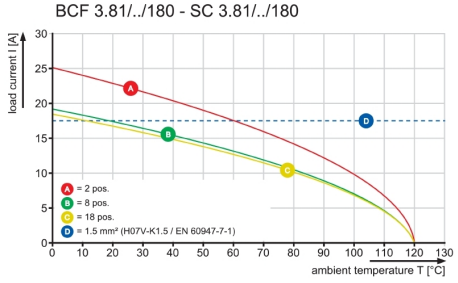

Example of use

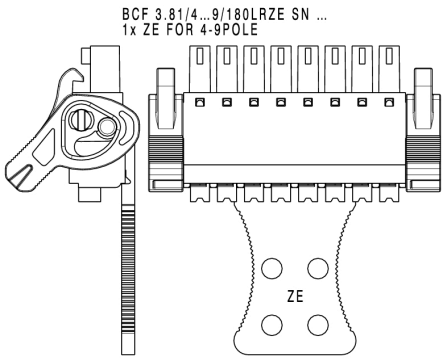

OMNIMATE Signal - series BC/SC 3.81
BCF 3.81/12/180LRZE SN OR BX

Weidmüller Interface GmbH & Co. KG
Klingenbergstraße 26
D-32758 Detmold
Germany
Fon: +49 5231 14-0
Fax: +49 5231 14-292083
www.weidmueller.com

Drawings

Example of use

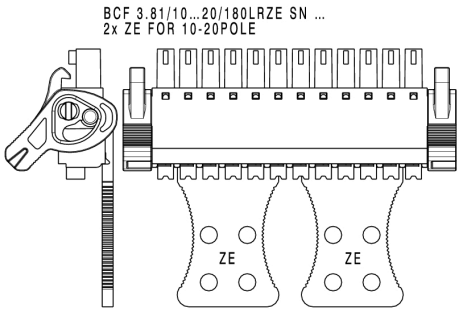

MASSE OHNE TOLERANZ SIND KEINE PRUEFMASSE
DIMS. WITHOUT TOLERANCE ARE NOT CONTROL DIMS.

BCF 3.81_180LRZE

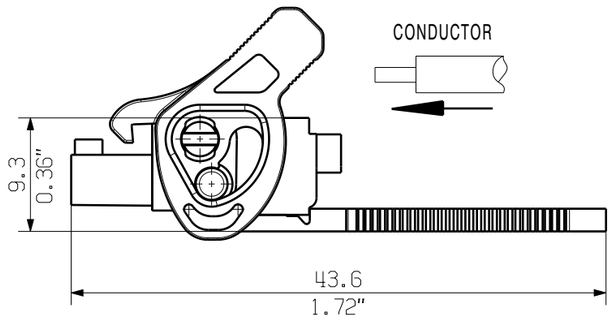

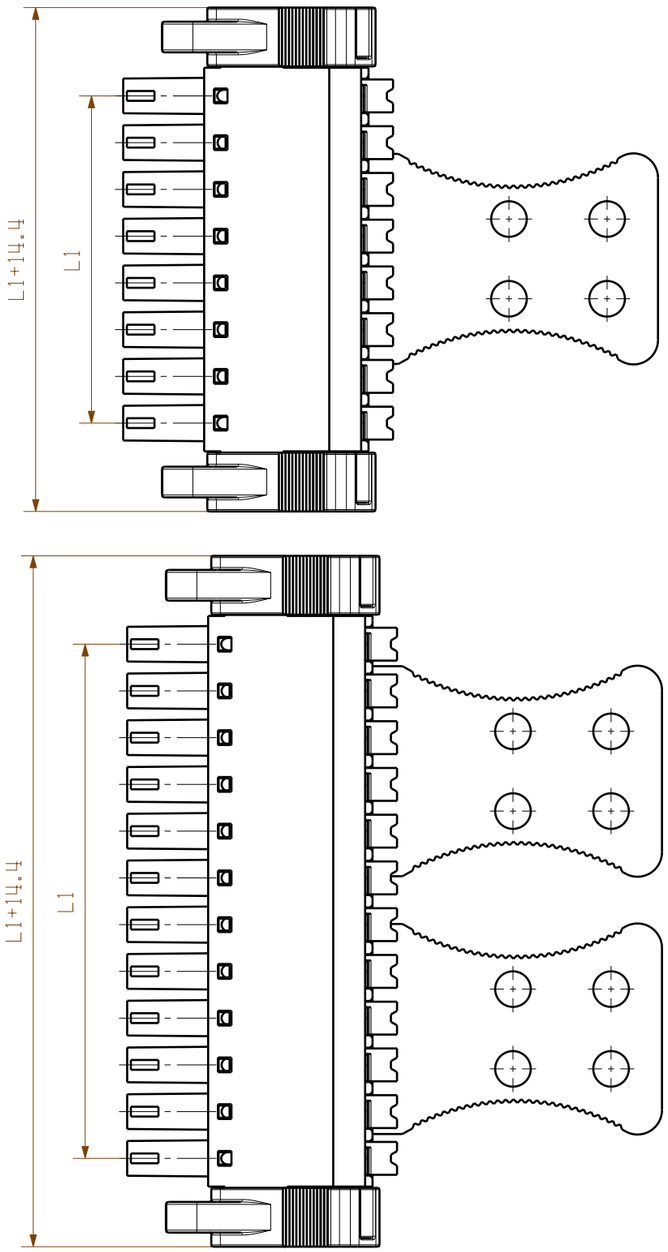

4- 9 POLE

10- 18 POLE

n	L1 [mm]	L1 [inch]
18	64.77	2.550
17	60.96	2.400
16	57.15	2.250
15	53.34	2.100
14	49.53	1.950
13	45.72	1.800
12	41.91	1.650
11	38.10	1.500
10	34.29	1.350
9	30.48	1.200
8	26.67	1.050
7	22.86	0.900
6	19.05	0.750
5	15.24	0.600
4	11.43	0.450
3	7.62	0.300
2	3.81	0.150

KUNDENZEICHNUNG
CUSTOMER DRAWING

For the mounting of PCBs, it should be noted that the rated data given in the catalogue relates only to the connection elements. The neccessary creepage and clearance paths must be observed in connection with the respective applicant in accordance to VDE 0110. The current- carrying capacity and pitch tolerance is to be determined according to DIN IEC 326 part 3 very fine.

Weidmüller connectors are tested to the DIN VDE 0627 standard, and are valid for its field of application. Provided that the connectors are used to the intended purpose, all requirements with respect to the occuring of electrical, mechanical, thermic and corrosive stress will be satisfied.

MAX. NRN./NOS.	55304/5 18.05.11 GE_G	00	CAT.NO.: .
	MODIFICATION		Weidmüller
			C 40414 07
			DRAWING NO. ISSUE NO.
			SHEET 07 OF 08 SHEETS
	DATE	NAME	
	DRAWN 27.12.2006	XU_S	BCF 3.81/.../180LRZE
	RESPONSIBLE	GE_G	BUCHSENLEISTE
SCALE: 2/1	CHECKED 03.06.2011	ZHOU_N	SOCKET BLOCK
SUPERSEDES: .	APPROVED	XU_S	PRODUCT FILE: BCF 3.81 7072

WEITERGABE SOWIE VERVIELFAELTIGUNG DIESES DOKUMENTS, VERWERTUNG UND MITTEILUNG SEINES INHALTS SIND VERBOTEN, SOWEIT NICHT AUSDRUECKLICH GESTATTET.
ZUWIDERHANDLUNGEN VERPFLICHTEN ZU SCHADENERSATZ. ALLE RECHTE FUER DEN FALL DER PATENT- , GEBRAUCHSMUSTER- ODER GESCHMACKSMUSTEREINTRAGUNG VORBEHALTEN.
THE REPRODUCTION, DISTRIBUTION AND UTILIZATION OF THIS DOCUMENT AS WELL AS THE COMMUNICATION OF ITS CONTENTS TO OTHERS WITHOUT EXPLICID AUTHORIZATION IS PROHIBITED.
OFFENDERS WILL BE HELD LIABLE FOR THE PAYMENT OF DAMAGES. WEIDMUELLER EXCLUSIVELY RESERVES THE RIGHT TO FILE FOR PATENTS, UTILITY MODELS OR DESIGNS.
© WEIDMUELLER INTERFACE GmbH & Co.KG