SAI-M23-SK-VA-AG

Weidmüller Interface GmbH & Co. KG
Klingenbergstraße 26
D-32758 Detmold
Germany
Fon: +49 5231 14-0
Fax: +49 5231 14-292083
www.weidmueller.com

Protective caps protect unassigned plug-in stations against external influences.

General ordering data

Type	SAI-M23-SK-VA-AG
Order No.	2125220000
Version	Protected component assemblies, Protective cap
GTIN (EAN)	4050118425802
Qty.	1 pc(s).

SAI-M23-SK-VA-AG

Weidmüller Interface GmbH & Co. KG
Klingenbergstraße 26
D-32758 Detmold
Germany
Fon: +49 5231 14-0
Fax: +49 5231 14-292083
www.weidmueller.com

Technical data

Dimensions and weights

Net weight	15 g

Temperatures

Ambient temperature	-25 °C...+70 °C

Environmental Product Compliance

REACH SVHC	Lead 7439-92-1

General data

Cable glands	M 23	Housing main material	Stainless steel, rust-proof
Material	Stainless steel, rust-proof	Protection degree	IP67, IP69K

Classifications

ETIM 6.0	EC002314	ETIM 7.0	EC002314
eClass 9.0	27-44-02-92	eClass 9.1	27-44-02-08
eClass 10.0	27-44-02-92		

Approvals

ROHS	Conform

Downloads

Brochure/Catalogue	FL FIELDWIRING EN

SAI-M23-SK-VA-AG

Weidmüller Interface GmbH & Co. KG
Klingenbergstraße 26
D-32758 Detmold
Germany
Fon: +49 5231 14-0
Fax: +49 5231 14-292083
www.weidmueller.com
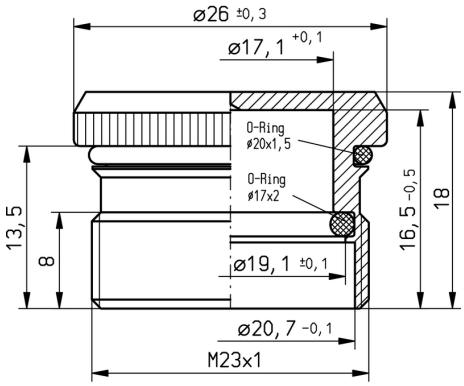
Drawings