OMNIMATE Signal - series BC/SC 3.81
SCZ 3.81/02/180FI SN OR BX

Weidmüller Interface GmbH & Co. KG
Klingenbergstraße 26
D-32758 Detmold
Germany
Fon: +49 5231 14-0
Fax: +49 5231 14-292083
www.weidmueller.com

Product image

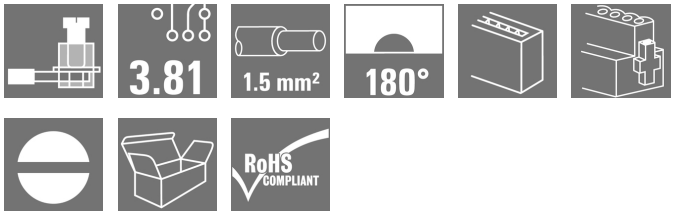

Similar to illustration

The inverted SCZ pin plug with clamping-yoke screw connection is designed for straight wire connections in 3.81-mm pitch. It can be used in two ways:

- for wire-to-wire connections together with the BCZ
- as a mating plug for the touch-safe BCL socket block on the PCB.

The SCZ is available in four different versions:

- Without flange ("G", closed)
- With standard flange ("F", with socket nut)
- With inverted flange ("FI", with screw)
- and with Weidmüller's patented release latch for a tool-free, no-strain disconnect

The SCZ provides space for labelling and can be coded.

General ordering data

Type	SCZ 3.81/02/180FI SN OR BX
Order No.	1970260000
Version	PCB plug-in connector, male plug, 3.81 mm, Number of poles: 2, 180°, Clamping yoke connection, Clamping range, max. : 1.5 mm², Box
GTIN (EAN)	4032248679683
Qty.	50 pc(s).
Product data	IEC: 320 V / 17.5 A / 0.2 - 1.5 mm² UL: 300 V / 10 A / AWG 28 - AWG 16
Packaging	Box

Creation date May 3, 2020 5:08:06 AM CEST

OMNIMATE Signal - series BC/SC 3.81
SCZ 3.81/02/180FI SN OR BX

Weidmüller Interface GmbH & Co. KG
Klingenbergstraße 26
D-32758 Detmold
Germany
Fon: +49 5231 14-0
Fax: +49 5231 14-292083
www.weidmueller.com

Technical data

Dimensions and weights

Height	11.1 mm	Height (inches)	0.437 inch
Depth	18.4 mm	Depth (inches)	0.724 inch
Net weight	2.5 g		

Environmental Product Compliance

REACH SVHC	Lead 7439-92-1

System Parameters

Product family	OMNIMATE Signal - series BC/SC 3.81	Type of connection	Field connection
Wire connection method	Clamping yoke connection	Pitch in mm (P)	3.81 mm
Pitch in inches (P)	0.15 inch	Conductor outlet direction	180°
Number of poles	2	L1 in mm	3.81 mm
L1 in inches	0.15 inch	Number of rows	1
Pin series quantity	1	Rated cross-section	1 mm²
Touch-safe protection acc. to DIN VDE 57 106	Safe from finger touch	Touch-safe protection acc. to DIN VDE 0470	IP 20
Volume resistance	≤ 5mΩ	Can be coded	Yes
Stripping length	7 mm	Tightening torque, min.	0.2 Nm
Tightening torque, max.	0.25 Nm	Clamping screw	M 2
Screwdriver blade	0.4 x 2.5	Screwdriver blade standard	DIN 5264
Plugging cycles	25	Plugging force/pole, max.	8 N
Pulling force/pole, max.	5 N		

Material data

Insulating material	PA 66 GF 30	Colour	orange
Colour chart (similar)	RAL 2000	Insulating material group	II
Comparative Tracking Index (CTI)	≥ 550	Insulation strength	≥ 10^8 Ω
UL 94 flammability rating	V-0	GWFI	960 °C
Contact material	Copper alloy	Contact surface	tinned
Layer structure of plug contact	4-8 µm Sn	Storage temperature, min.	-25 °C
Storage temperature, max.	50 °C	Max. relative humidity during storage	70 %
Operating temperature, min.	-50 °C	Operating temperature, max.	120 °C
Temperature range, installation, min.	-25 °C	Temperature range, installation, max.	120 °C

Conductors suitable for connection

Clamping range, min.	0.08 mm²
Clamping range, max.	1.5 mm²
Wire connection cross section AWG, min.	AWG 28
Wire connection cross section AWG, max.	AWG 16
Solid, min. H05(07) V-U	0.2 mm²
Solid, max. H05(07) V-U	1.5 mm²
Flexible, min. H05(07) V-K	0.2 mm²
Flexible, max. H05(07) V-K	1.5 mm²
w. plastic collar ferrule, DIN 46228 pt 4, min.	0.2 mm²
w. plastic collar ferrule, DIN 46228 pt 4, max.	1.5 mm²
w. wire end ferrule, DIN 46228 pt 1, min.	0.2 mm²

OMNIMATE Signal - series BC/SC 3.81
SCZ 3.81/02/180FI SN OR BX

Weidmüller Interface GmbH & Co. KG
Klingenbergstraße 26
D-32758 Detmold
Germany
Fon: +49 5231 14-0
Fax: +49 5231 14-292083
www.weidmueller.com

Technical data

w. wire end ferrule, DIN 46228 pt 1, max.	1.5 mm²			
Plug gauge in accordance with EN 60999 a x b; ø	2.4 mm x 1.5 mm ; 2.4 mm			
Clampable conductor	Cross-section for conductor connection	Type	fine-wired	
		nominal	0.5 mm²	
	wire end ferrule	Stripping length	nominal	6 mm
		Recommended wire-end ferrule	H0,5/6	
	Cross-section for conductor connection	Type	fine-wired	
		nominal	0.75 mm²	
	wire end ferrule	Stripping length	nominal	6 mm
		Recommended wire-end ferrule	H0,75/6	
	Cross-section for conductor connection	Type	fine-wired	
		nominal	1 mm²	
	wire end ferrule	Stripping length	nominal	6 mm
		Recommended wire-end ferrule	H1,0/6	
	Cross-section for conductor connection	Type	fine-wired	
		nominal	1.5 mm²	
	wire end ferrule	Stripping length	nominal	7 mm
		Recommended wire-end ferrule	H1,5/7	
Reference text	The outside diameter of the plastic collar should not be larger than the pitch (P), Length of ferrules is to be chosen depending on the product and the rated voltage.			
Max. clamping range	1.5 mm²			

Rated data acc. to IEC

tested acc. to standard	IEC 60664-1, IEC 61984	Rated current, min. number of poles (Tu=20°C)	17.5 A
Rated current, max. number of poles (Tu=20°C)	17.1 A	Rated current, min. number of poles (Tu=40°C)	17.5 A
Rated current, max. number of poles (Tu=40°C)	15.2 A	Rated voltage for surge voltage class / pollution degree II/2	320 V
Rated voltage for surge voltage class / pollution degree III/2	160 V	Rated voltage for surge voltage class / pollution degree III/3	160 V
Rated impulse voltage for surge voltage class/ pollution degree II/2	2.5 kV	Rated impulse voltage for surge voltage class/ pollution degree III/2	2.5 kV
Rated impulse voltage for surge voltage class/ contamination degree III/3	2.5 kV	Short-time withstand current resistance	3 x 1s with 76 A

Rated data acc. to CSA

Institute (CSA)		Certificate No. (CSA)	200039-1121690
Rated voltage (Use group B / CSA)	300 V	Rated voltage (Use group C / CSA)	50 V
Rated current (Use group B / CSA)	11 A	Rated current (Use group C / CSA)	11 A
Wire cross-section, AWG, min.	AWG 28	Wire cross-section, AWG, max.	AWG 16
Reference to approval values	Specifications are maximum values, details - see approval certificate.		

OMNIMATE Signal - series BC/SC 3.81
SCZ 3.81/02/180FI SN OR BX

Weidmüller Interface GmbH & Co. KG
Klingenbergstraße 26
D-32758 Detmold
Germany
Fon: +49 5231 14-0
Fax: +49 5231 14-292083
www.weidmueller.com

Technical data

Rated data acc. to UL 1059

Institute (cURus)		Certificate No. (cURus)	E60693
Rated voltage (Use group B / UL 1059)	300 V	Rated voltage (Use group D / UL 1059)	300 V
Rated current (Use group B / UL 1059)	10 A	Rated current (Use group D / UL 1059)	10 A
Wire cross-section, AWG, min.	AWG 28	Wire cross-section, AWG, max.	AWG 16
Reference to approval values	Specifications are maximum values, details - see approval certificate.		

Packing

Packaging	Box	VPE length	0 m
VPE width	0 m	VPE height	0 m

Classifications

ETIM 6.0	EC002638	ETIM 7.0	EC002638
eClass 9.0	27-44-03-09	eClass 9.1	27-44-03-09
eClass 10.0	27-44-03-09	UNSPSC	30-21-18-01

Notes

Notes	• Additional colours on request • Rated current related to rated cross-section & min. No. of poles. • Wire end ferrule with plastic collar to DIN 46228/4 • P on drawing = pitch • Rated data refer only to the component itself. Clearance and creepage distances to other components are to be designed in accordance with the relevant application standards.
IPC conformity	Conformity: The products are developed, manufactured and delivered according international recognized standards and norms and comply with the assured properties in the data sheet resp. fulfill decorative properties in accordance with IPC-A-610 "Class 2". Further claims on the products can be evaluated on request.

Approvals

Approvals	
ROHS	Conform

OMNIMATE Signal - series BC/SC 3.81
SCZ 3.81/02/180FI SN OR BX

Weidmüller Interface GmbH & Co. KG
Klingenbergstraße 26
D-32758 Detmold
Germany
Fon: +49 5231 14-0
Fax: +49 5231 14-292083
www.weidmueller.com

Technical data

Downloads

Approval/Certificate/Document of Conformity	Declaration of the Manufacturer
Brochure/Catalogue	FL DRIVES EN MB DEVICE MANUF. EN FL DRIVES DE CAT 2 PORTFOLIOGUIDE EN FL BUILDING SAFETY EN FL APPL LED LIGHTING EN FL INDUSTR.CONTROLS EN FL MACHINE SAFETY EN FL HEATING ELECTR EN FL APPL_INVERTER EN FL_BASE_STATION_EN FL ELEVATOR EN FL POWER SUPPLY EN FL 72H SAMPLE SER EN PO OMNIMATE EN
Engineering Data	STEP

OMNIMATE Signal - series BC/SC 3.81
SCZ 3.81/02/180FI SN OR BX

Weidmüller Interface GmbH & Co. KG
Klingenbergstraße 26
D-32758 Detmold
Germany
Fon: +49 5231 14-0
Fax: +49 5231 14-292083
www.weidmueller.com

Drawings

Dimensional drawing

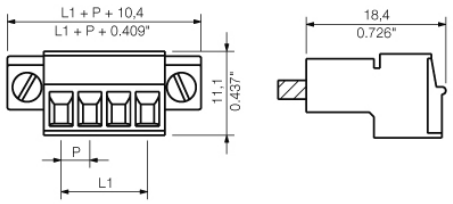

Graph

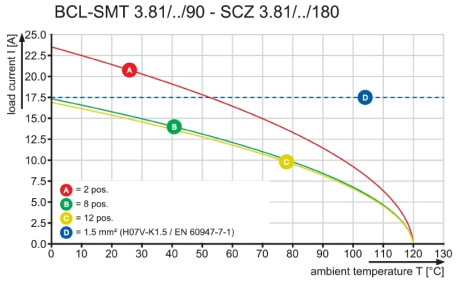

Graph

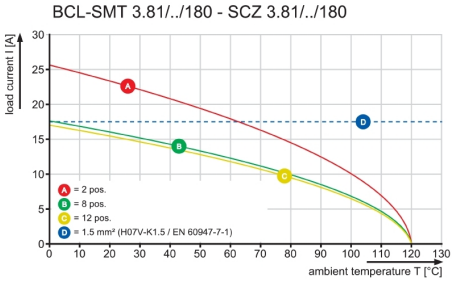

Graph

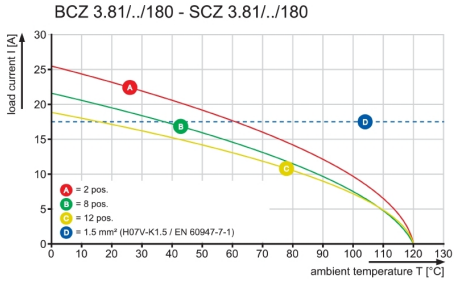

OMNIMATE Signal - series BC/SC 3.81
SCZ 3.81/02/180FI SN OR BX

Weidmüller Interface GmbH & Co. KG
Klingenbergstraße 26
D-32758 Detmold
Germany
Fon: +49 5231 14-0
Fax: +49 5231 14-292083
www.weidmueller.com

Accessories

Coding elements

Only connects what is supposed to be connected: the right connection at the right place.
Coding elements and locking devices clearly assign connecting elements during the manufacturing process and operation
The coding elements and locking devices are inserted prior to assembly or during the cable assembly phase.
The Weidmüller alternative: configure online using the variant configurator to precode prior to delivery.
Incorrect assembly on the circuit board and incorrect plugging of connecting elements is no longer possible.
The advantage: no troubleshooting during manufacture and no operational errors by the user.

General ordering data

Type	SC-SMT 3.81 KO GY BX	Version	Product data	Packaging
Order No.	1968900000	PCB plug-in connector, Accessories, Coding element, grey, Number of poles: 6		Box
GTIN (EAN)	4032248772865			
Qty.	100 pc(s).			

WEITERGABE SOWIE VERVIELFAELTIGUNG DIESES DOKUMENTS, VERWERTUNG UND MITTEILUNG SEINES INHALTS SIND VERBOTEN, SOWEIT NICHT AUSDRUECKLICH GESTATTET.
ZUWIDERHANDLUNGEN VERPFLICHTEN ZU SCHADENERSATZ. ALLE RECHTE FUER DEN FALL DER PATENT-, GEBRAUCHSMUSTER- ODER GESCHMACKSMUSTEREINTRAGUNG VORBEHALTEN.
THE REPRODUCTION, DISTRIBUTION AND UTILIZATION OF THIS DOCUMENT AS WELL AS THE COMMUNICATION OF ITS CONTENTS TO OTHERS WITHOUT EXPLICID AUTHORIZATION IS PROHIBITED.
OFFENDERS WILL BE HELD LIABLE FOR THE PAYMENT OF DAMAGES. ALL RIGHTS RESERVED IN THE EVENT OF THE GRANT OF A PATENT, UTILITY MODEL OR DESIGN.

SCZ 3.81/.../180G ...

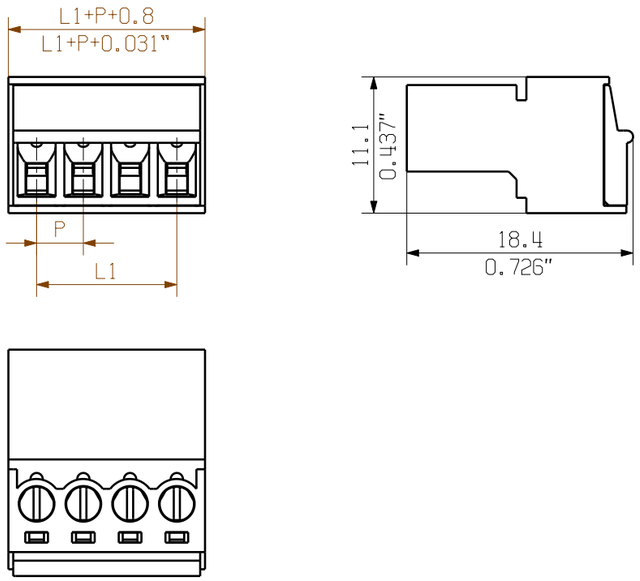

SCZ 3.81/.../180FI ...

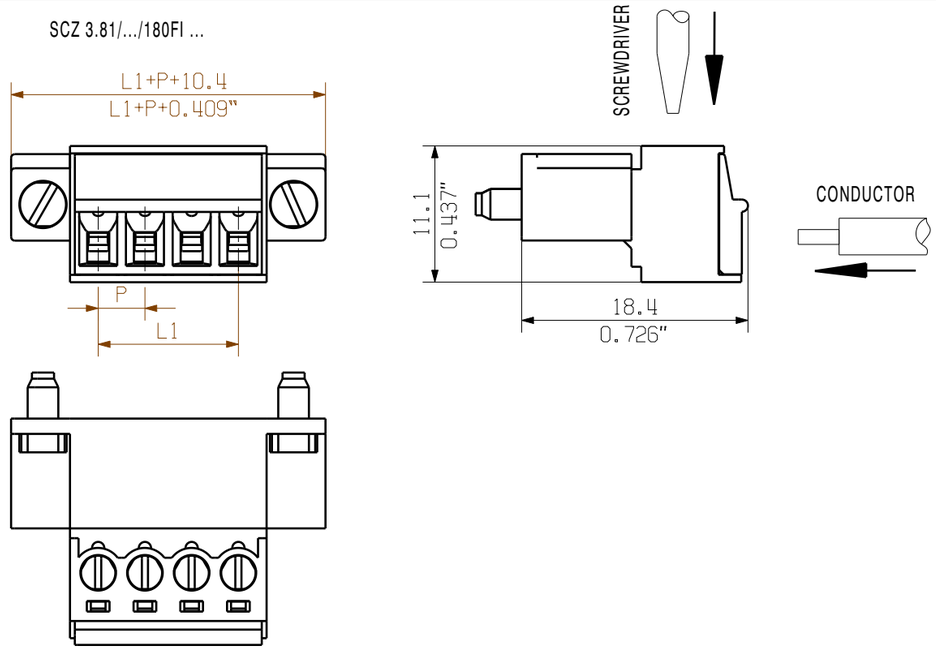

SCZ 3.81/.../180F ...

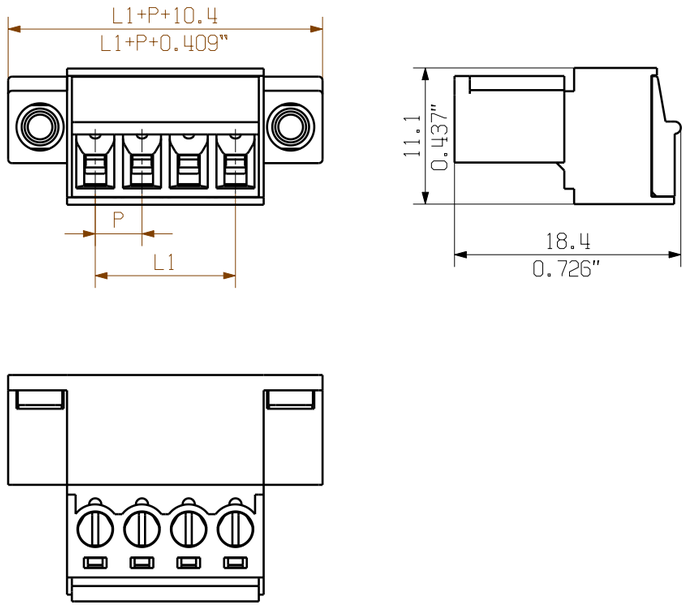

SCZ 3.81/.../180LR ...

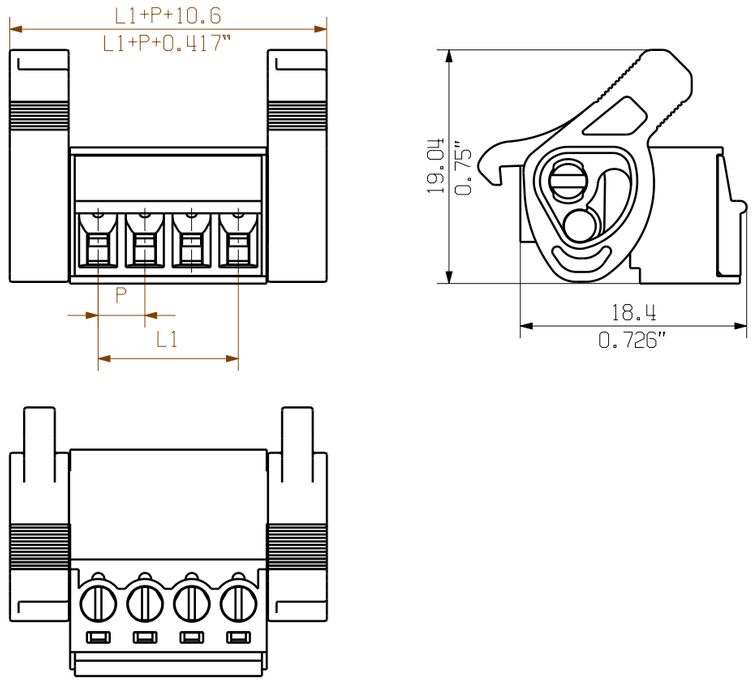

N	L1 [mm]	L1 [inch]
12	41.91	1.651
11	38.10	1.501
10	34.29	1.351
9	30.48	1.201
8	26.67	1.051
7	22.86	0.901
6	19.05	0.751
5	15.24	0.600
4	11.43	0.450
3	7.62	0.300
2	3.81	0.150

KUNDENZEICHNUNG
CUSTOMER DRAWING

For the mounting of PCBs, it should be noted that the rated data stated here relates only to the PCB components alone.
The neccessary creepage and clearance paths must be observed in connection with the respective applicant in accordance to IEC 664 / VDE 0110.
The current- carrying capacity and pitch tolerance is to be determined according to DIN IEC 326 part 3 very fine.

Weidmüller PCB components are tested to the DIN EN 61984 standard, and are valid for its field of application.
Provided that the components are used to the intended purpose, all requirements with respect to the occuring of electrical, mechanical, thermic and corrosive stress will be satisfied.

55304/5 03.06.11 GE_G	00		
MODIFICATION			
		DATE	NAME
DRAWN		09.10.2008	SHI_S
RESPONSIBLE			XU_S
CHECKED		03.06.2011	RICHTER_G
APPROVED			XU_S

SCALE: 2/1
SUPERSEDES: .
SUPERSEDED BY: .

Weidmüller

CAT.NO.: .

DRAWING NO. 2 40408 ISSUE NO. 05

SHEET . OF . SHEETS

SCZ 3.81/.../180...

ZUGBUEGELANSCHLUSS STIFTLEISTE
CLAMPING YOKE CONNECTION PIN HEADER

PRODUCT FILE: SCZ 3.81 7078