OMNIMATE Signal - series BL/SL 5.00
BLZP 5.00HC/18/180LR SN OR BX

Weidmüller Interface GmbH & Co. KG
Klingenbergstraße 26
D-32758 Detmold
Germany
Fon: +49 5231 14-0
Fax: +49 5231 14-292083
www.weidmueller.com

Product image

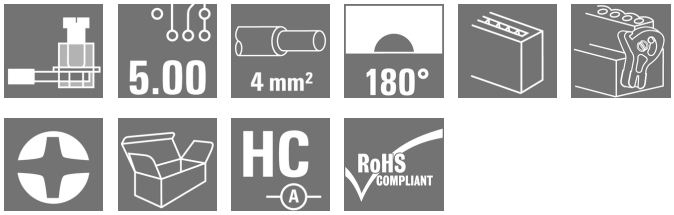

Similar to illustration

Female plug with clamping-yoke screw system for connecting wires with straight (180°) outlet direction. The female connectors provide space for labelling and can be coded. Fastened by means of a flange or release latch. The also provide an integrated plus/minus screw, protection against faulty insertion of the wire, and they are delivered with open clamping yokes. HC = High Current.

General ordering data

Type	BLZP 5.00HC/18/180LR SN OR BX
Order No.	1956210000
Version	PCB plug-in connector, female plug, 5.00 mm, Number of poles: 18, 180°, Clamping yoke connection, Clamping range, max. : 4 mm², Box
GTIN (EAN)	4032248634903
Qty.	18 pc(s).
Product data	IEC: 400 V / 23 A / 0.2 - 4 mm² UL: 300 V / 20 A / AWG 26 - AWG 12
Packaging	Box

Creation date May 3, 2020 7:15:21 AM CEST

OMNIMATE Signal - series BL/SL 5.00
BLZP 5.00HC/18/180LR SN OR BX

Weidmüller Interface GmbH & Co. KG
Klingenbergstraße 26
D-32758 Detmold
Germany
Fon: +49 5231 14-0
Fax: +49 5231 14-292083
www.weidmueller.com

Technical data

Dimensions and weights

Width	99.8 mm	Width (inches)	3.929 inch
Height	16.9 mm	Height (inches)	0.665 inch
Depth	29.6 mm	Depth (inches)	1.165 inch
Net weight	30.85 g		

System Parameters

Product family	OMNIMATE Signal - series BL/SL 5.00	Type of connection	Field connection
Wire connection method	Clamping yoke connection	Pitch in mm (P)	5 mm
Pitch in inches (P)	0.197 inch	Conductor outlet direction	180°
Number of poles	18	L1 in mm	85 mm
L1 in inches	3.349 inch	Number of rows	1
Pin series quantity	1	Rated cross-section	4 mm²
Touch-safe protection acc. to DIN VDE 57 106	Safe from finger touch	Volume resistance	≤ 5mΩ
Can be coded	Yes	Stripping length	7 mm
Tightening torque, min.	0.4 Nm	Tightening torque, max.	0.5 Nm
Clamping screw	M 2.5	Screwdriver blade	0.6 x 3.5, PH 1, PZ 1
Screwdriver blade standard	DIN 5264, ISO 8764/2-PH, ISO 8764/2-PZ	Plugging cycles	25
Plugging force/pole, max.	10 N	Pulling force/pole, max.	9 N

Material data

Insulating material	PBT	Colour	orange
Colour chart (similar)	RAL 2000	Insulating material group	IIIa
Comparative Tracking Index (CTI)	≥ 200	Insulation strength	≥ 10^8 Ω
UL 94 flammability rating	V-0	GWFI	960 °C
Contact material	Copper alloy	Contact surface	tinned
Layer structure of plug contact	4-8 µm Sn hot-dip tinned	Storage temperature, min.	-25 °C
Storage temperature, max.	50 °C	Max. relative humidity during storage	70 %
Operating temperature, min.	-50 °C	Operating temperature, max.	100 °C
Temperature range, installation, min.	-25 °C	Temperature range, installation, max.	100 °C

Conductors suitable for connection

Clamping range, min.	0.13 mm²
Clamping range, max.	4 mm²
Wire connection cross section AWG, min.	AWG 30
Wire connection cross section AWG, max.	AWG 12
Solid, min. H05(07) V-U	0.2 mm²
Solid, max. H05(07) V-U	4 mm²
Flexible, min. H05(07) V-K	0.2 mm²
Flexible, max. H05(07) V-K	4 mm²
w. plastic collar ferrule, DIN 46228 pt 4, min.	0.2 mm²
w. plastic collar ferrule, DIN 46228 pt 4, max.	2.5 mm²
w. wire end ferrule, DIN 46228 pt 1, min.	0.2 mm²
w. wire end ferrule, DIN 46228 pt 1, max.	4 mm²

Weidmüller

OMNIMATE Signal - series BL/SL 5.00
BLZP 5.00HC/18/180LR SN OR BX

Weidmüller Interface GmbH & Co. KG
Klingenbergstraße 26
D-32758 Detmold
Germany
Fon: +49 5231 14-0
Fax: +49 5231 14-292083
www.weidmueller.com

Technical data

Plug gauge in accordance with EN 60999 a x b; ø	2.8 mm x 2.4 mm			
Clampable conductor	Cross-section for conductor connection	Type	fine-wired	
		nominal	0.5 mm²	
	wire end ferrule	Stripping length	nominal	6 mm
		Recommended wire-end ferrule	H0,5/6	
	Cross-section for conductor connection	Type	fine-wired	
		nominal	1 mm²	
	wire end ferrule	Stripping length	nominal	6 mm
		Recommended wire-end ferrule	H1,0/6	
	Cross-section for conductor connection	Type	fine-wired	
		nominal	1.5 mm²	
	wire end ferrule	Stripping length	nominal	7 mm
		Recommended wire-end ferrule	H1,5/7	
	Cross-section for conductor connection	Type	fine-wired	
		nominal	2.5 mm²	
	wire end ferrule	Stripping length	nominal	7 mm
		Recommended wire-end ferrule	H2,5/7	
	Cross-section for conductor connection	Type	fine-wired	
		nominal	0.75 mm²	
	wire end ferrule	Stripping length	nominal	6 mm
		Recommended wire-end ferrule	H0,75/6	
Reference text	The outside diameter of the plastic collar should not be larger than the pitch (P), Length of ferrules is to be chosen depending on the product and the rated voltage.			
Max. clamping range	4 mm²			

Rated data acc. to IEC

tested acc. to standard	IEC 60664-1, IEC 61984	Rated current, min. number of poles (Tu=20°C)	23 A
Rated current, max. number of poles (Tu=20°C)	18 A	Rated current, min. number of poles (Tu=40°C)	21 A
Rated current, max. number of poles (Tu=40°C)	16 A	Rated voltage for surge voltage class / pollution degree II/2	400 V
Rated voltage for surge voltage class / pollution degree III/2	320 V	Rated voltage for surge voltage class / pollution degree III/3	250 V
Rated impulse voltage for surge voltage class/ pollution degree II/2	4 kV	Rated impulse voltage for surge voltage class/ pollution degree III/2	4 kV
Rated impulse voltage for surge voltage class/ contamination degree III/3	4 kV	Short-time withstand current resistance	3 x 1s with 120 A

Rated data acc. to CSA

Institute (CSA)		Certificate No. (CSA)	200039-1121690
Rated voltage (Use group B / CSA)	300 V	Rated voltage (Use group C / CSA)	50 V
Rated voltage (Use group D / CSA)	300 V	Rated current (Use group B / CSA)	20 A
Rated current (Use group D / CSA)	20 A	Wire cross-section, AWG, min.	AWG 30
Wire cross-section, AWG, max.	AWG 12	Reference to approval values	Specifications are maximum values, details - see approval certificate.

OMNIMATE Signal - series BL/SL 5.00
BLZP 5.00HC/18/180LR SN OR BX

Weidmüller Interface GmbH & Co. KG
Klingenbergstraße 26
D-32758 Detmold
Germany
Fon: +49 5231 14-0
Fax: +49 5231 14-292083
www.weidmueller.com

Technical data

Rated data acc. to UL 1059

Institute (cURus)		Certificate No. (cURus)	E60693
Rated voltage (Use group B / UL 1059)	300 V	Rated voltage (Use group D / UL 1059)	300 V
Rated current (Use group B / UL 1059)	20 A	Rated current (Use group D / UL 1059)	10 A
Wire cross-section, AWG, min.	AWG 26	Wire cross-section, AWG, max.	AWG 12
Reference to approval values	Specifications are maximum values, details - see approval certificate.		

Packing

Packaging	Box	VPE length	0
VPE width	0	VPE height	0

Classifications

ETIM 6.0	EC002638	ETIM 7.0	EC002638
eClass 9.0	27-44-03-09	eClass 9.1	27-44-03-09
eClass 10.0	27-44-03-09	UNSPSC	30-21-18-01

Notes

Notes	• Additional colours on request • Gold-plated contact surfaces on request • Rated current related to rated cross-section & min. No. of poles. • Wire end ferrule without plastic collar to DIN 46228/1 • Wire end ferrule with plastic collar to DIN 46228/4 • P on drawing = pitch • Rated data refer only to the component itself. Clearance and creepage distances to other components are to be designed in accordance with the relevant application standards.
IPC conformity	Conformity: The products are developed, manufactured and delivered according international recognized standards and norms and comply with the assured properties in the data sheet resp. fulfill decorative properties in accordance with IPC-A-610 "Class 2". Further claims on the products can be evaluated on request.

Approvals

Approvals	
ROHS	Conform

OMNIMATE Signal - series BL/SL 5.00
BLZP 5.00HC/18/180LR SN OR BX

Weidmüller Interface GmbH & Co. KG
Klingenbergstraße 26
D-32758 Detmold
Germany
Fon: +49 5231 14-0
Fax: +49 5231 14-292083
www.weidmueller.com

Technical data

Downloads

Approval/Certificate/Document of Conformity	Declaration of the Manufacturer
Brochure/Catalogue	FL DRIVES EN MB DEVICE MANUF. EN FL DRIVES DE CAT 2 PORTFOLIOGUIDE EN FL BUILDING SAFETY EN FL APPL LED LIGHTING EN FL INDUSTR.CONTROLS EN FL MACHINE SAFETY EN FL HEATING ELECTR EN FL APPL_INVERTER EN FL_BASE_STATION_EN FL ELEVATOR EN FL POWER SUPPLY EN FL 72H SAMPLE SER EN PO OMNIMATE EN
Engineering Data	STEP

OMNIMATE Signal - series BL/SL 5.00
BLZP 5.00HC/18/180LR SN OR BX

Weidmüller Interface GmbH & Co. KG
Klingenbergstraße 26
D-32758 Detmold
Germany
Fon: +49 5231 14-0
Fax: +49 5231 14-292083
www.weidmueller.com

Drawings

Dimensional drawing

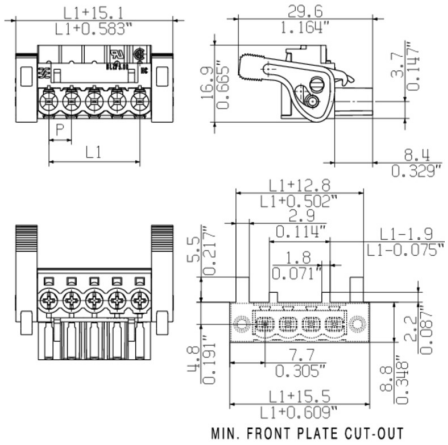

Graph

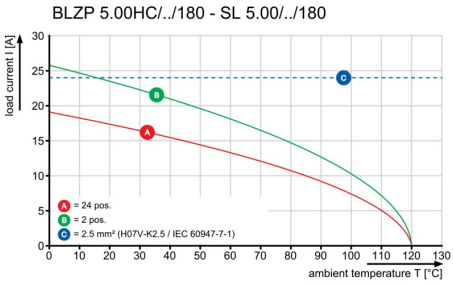

Product benefits

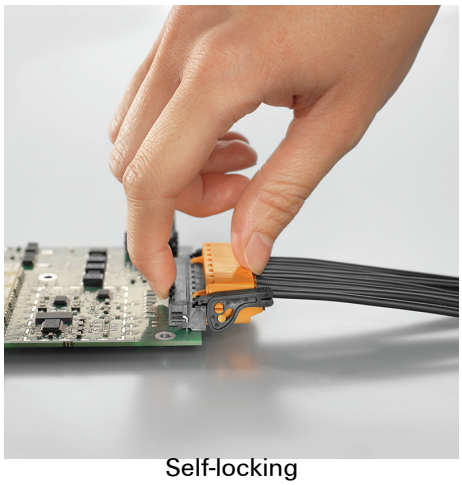

Self-locking
Immediately on plugging in

Product benefits

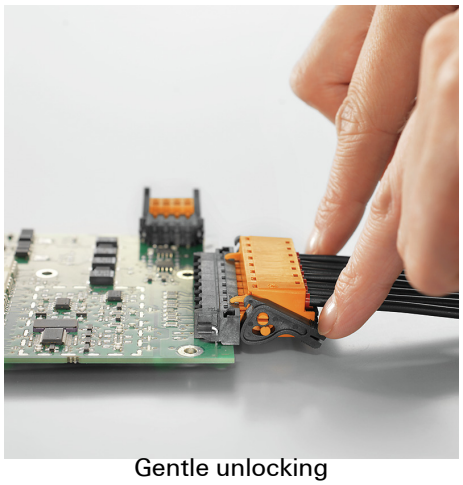

Gentle unlocking
Low mechanical stress

OMNIMATE Signal - series BL/SL 5.00
BLZP 5.00HC/18/180LR SN OR BX

Weidmüller Interface GmbH & Co. KG
Klingenbergstraße 26
D-32758 Detmold
Germany
Fon: +49 5231 14-0
Fax: +49 5231 14-292083
www.weidmueller.com

Mating connector (fully pluggable)

SL-SMT 5.00HC/90LF Box

High-temperature-resistant pin header, packed in box or tape. On tape, with 1.5 mm solder pin, optimised for automatic assembly. 3.2 mm solder pin suitable for reflow and wave soldering. The pin headers provide space for labelling and can be coded. HC = High Current.

General ordering data

Type	SL-SMT 5.00HC/18/90LF 3 ...	Version	Product data	Packaging
Order No.	1840510000	PCB plug-in connector, male header, Solder flange, THT/THR solder connection, 5.00 mm, Number of poles: 18, 90°, Solder pin length (l): 3.2 mm, tinned, black, Box	IEC: 400 V / 27.5 A UL: 300 V / 18.5 A	Box
GTIN (EAN)	4032248351350			
Qty.	18 pc(s).			

SLDV-THR 5.00/180F

High-temperature resistant, double level, laterally offset, male connector with flange or solder flange. 1.5 mm solder pin is suitable for reflow soldering. 3.2 mm solder pin suitable for reflow and wave soldering. The pin headers provide space for labelling and can be coded.

General ordering data

Type	SLDV-THR 5.00/36/180F 1 ...	Version	Product data	Packaging
Order No.	1895390000	PCB plug-in connector, male header, Flange, THT/THR solder connection, 5.00 mm, Number of poles: 36, 180°, Solder pin length (l): 1.5 mm, tinned, black, Box	IEC: 400 V / 15 A UL: 300 V / 10 A	Box
GTIN (EAN)	4032248510139			
Qty.	10 pc(s).			
Type	SLDV-THR 5.00/36/180F 3 ...	Version	Product data	Packaging
Order No.	1881470000	PCB plug-in connector, male header, Flange, THT/THR solder connection, 5.00 mm, Number of poles: 36, 180°, Solder pin length (l): 3.2 mm, tinned, black, Box	IEC: 400 V / 15 A UL: 300 V / 10 A	Box
GTIN (EAN)	4032248482764			
Qty.	10 pc(s).			

OMNIMATE Signal - series BL/SL 5.00
BLZP 5.00HC/18/180LR SN OR BX

Weidmüller Interface GmbH & Co. KG
Klingenbergstraße 26
D-32758 Detmold
Germany
Fon: +49 5231 14-0
Fax: +49 5231 14-292083
www.weidmueller.com

Mating connector (fully pluggable)

SL-SMT 5.00HC/180LF Box

High-temperature-resistant pin header, packed in box or tape. On tape, with 1.5 mm solder pin, optimised for automatic assembly. 3.2 mm solder pin suitable for reflow and wave soldering. The pin headers provide space for labelling and can be coded. HC = High Current.

General ordering data

Type	SL-SMT 5.00HC/18/180LF ...	Version	Product data	Packaging
Order No.	1841550000	PCB plug-in connector, male header, Solder flange, THT/THR solder connection, 5.00 mm, Number of poles: 18, 180°, Solder pin length (l): 3.2 mm, tinned, black, Box	IEC: 400 V / 27.5 A UL: 300 V / 18.5 A	Box
GTIN (EAN)	4032248352456			
Qty.	18 pc(s).			

SLDV-THR 5.00/180FLF

High-temperature resistant, double level, laterally offset, closed ended male header, with solder flange option. 1.5 mm solder pin suitable for reflow soldering. 3.2 mm solder pin suitable for reflow and wave soldering. The pin headers provide space for labelling and can be coded.

General ordering data

Type	SLDV-THR 5.00/36/180FLF ...	Version	Product data	Packaging
Order No.	1895620000	PCB plug-in connector, male header, Flange / Solder flange, THT/THR solder connection, 5.00 mm, Number of poles: 36, 180°, Solder pin length (l): 1.5 mm, tinned, black, Box	IEC: 400 V / 15 A UL: 300 V / 10 A	Box
GTIN (EAN)	4032248510368			
Qty.	10 pc(s).			
Type	SLDV-THR 5.00/36/180FLF ...	Version	Product data	Packaging
Order No.	1883290000	PCB plug-in connector, male header, Flange / Solder flange, THT/THR solder connection, 5.00 mm, Number of poles: 36, 180°, Solder pin length (l): 3.2 mm, tinned, black, Box	IEC: 400 V / 15 A UL: 300 V / 10 A	Box
GTIN (EAN)	4032248487646			
Qty.	10 pc(s).			

OMNIMATE Signal - series BL/SL 5.00
BLZP 5.00HC/18/180LR SN OR BX

Weidmüller Interface GmbH & Co. KG
Klingenbergstraße 26
D-32758 Detmold
Germany
Fon: +49 5231 14-0
Fax: +49 5231 14-292083
www.weidmueller.com

Accessories

Strain reliefs

For frequent load changes: the "trailer coupling" for plug-in connectors.
The strain relief can do more than just relieve the strain on conductors:
Simply clip onto the plug and
- bundle conductors
- guide cables
- use as a connection and disconnection aid

No damage to the connecting points, clear, tidy wiring and easy to handle.
User advantages: permanent heavy-duty connections for harsh industrial environments and convenient operation ensure improved system availability.

General ordering data

Type	BLZ 5.00 ZE04 OR BX	Version	Product data	Packaging
Order No.	1652100000	PCB plug-in connector, Accessories, Strain relief, orange, Number of poles: 4		Box
GTIN (EAN)	4008190401771			
Qty.	50 pc(s).			
Type	BLZ 5.00 ZE08 OR BX	Version	Product data	Packaging
Order No.	1652040000	PCB plug-in connector, Accessories, Strain relief, orange, Number of poles: 8		Box
GTIN (EAN)	4008190401719			
Qty.	50 pc(s).			

Crosshead screwdriver Phillips

Crosshead screwdriver, Phillips, SDK PH DIN 5262, ISO 8764/2-PH, output to ISO 8764-PH, ChromTop tip, SoftFinish grip

General ordering data

Type	SDK PH1	Version
Order No.	9008480000	Screwdriver, Blade width (B): 4.5 mm, Blade length: 80 mm
GTIN (EAN)	4032248056477	
Qty.	1 pc(s).	

OMNIMATE Signal - series BL/SL 5.00
BLZP 5.00HC/18/180LR SN OR BX

Weidmüller Interface GmbH & Co. KG
Klingenbergstraße 26
D-32758 Detmold
Germany
Fon: +49 5231 14-0
Fax: +49 5231 14-292083
www.weidmueller.com

Accessories

Coding elements

Only connects what is supposed to be connected: the right connection at the right place.
Coding elements and locking devices clearly assign connecting elements during the manufacturing process and operation
The coding elements and locking devices are inserted prior to assembly or during the cable assembly phase.
The Weidmüller alternative: configure online using the variant configurator to precode prior to delivery.
Incorrect assembly on the circuit board and incorrect plugging of connecting elements is no longer possible.
The advantage: no troubleshooting during manufacture and no operational errors by the user.

General ordering data

Type	BLZ/SL KO BK BX	Version	Product data	Packaging
Order No.	1545710000	PCB plug-in connector, Accessories, Coding element, black, Number		Box
GTIN (EAN)	4008190087142	of poles: 1		
Qty.	50 pc(s).			
Type	BLZ/SL KO OR BX	Version	Product data	Packaging
Order No.	1573010000	PCB plug-in connector, Accessories, Coding element, orange, Number		Box
GTIN (EAN)	4008190048396	of poles: 1		
Qty.	100 pc(s).			

Crosshead screwdriver Pozidriv

Crosshead screwdriver, Pozidriv, SDK PZ DIN 5262, ISO 8764/2-PZ, output to ISO 8764/1-PZ, ChromTop tip, SoftFinish grip

General ordering data

Type	SDK PZ1	Version
Order No.	9008530000	Screwdriver, Blade width (B): 4.5 mm, Blade length: 80 mm
GTIN (EAN)	4032248056521	
Qty.	1 pc(s).	

OMNIMATE Signal - series BL/SL 5.00
BLZP 5.00HC/18/180LR SN OR BX

Weidmüller Interface GmbH & Co. KG
Klingenbergstraße 26
D-32758 Detmold
Germany
Fon: +49 5231 14-0
Fax: +49 5231 14-292083
www.weidmueller.com

Accessories

Slotted screwdriver

Slotted screwdriver with rounded blade SD DIN 5265, ISO 2380/2, output to DIN 5264, ISO 2380/1. ChromTop tip, SoftFinish grip

General ordering data

Type	SDS 0.6X3.5X100	Version
Order No.	9008330000	Screwdriver, Blade width (B): 3.5 mm, Blade length: 100 mm, Blade
GTIN (EAN)	4032248056286	thickness (A): 0.6 mm
Qty.	1 pc(s).	

Slotted screwdriver

VDE insulated slot-head screwdriver, SDI DIN 7437, ISO 2380/2, drive output acc. to DIN 5264, ISO 2380/1. SoftFinish grip

General ordering data

Type	SDIS 0.6X3.5X100	Version
Order No.	9008390000	Screwdriver, Blade width (B): 3.5 mm, Blade length: 100 mm, Blade
GTIN (EAN)	4032248056354	thickness (A): 0.6 mm
Qty.	1 pc(s).	

MASSE OHNE TOLERANZ SIND KEINE PRUEFMASSE
DIMS. WITHOUT TOLERANCE ARE NOT CONTROL DIMS.

DIE DEUTSCHE VERSION IST VERBINDLICH
THE GERMAN VERSION IS BINDING

WEITERGABE SOWIE VERVIELFAELTIGUNG DIESES DOKUMENTS, VERWERTUNG UND MITTEILUNG SEINES INHALTS SIND VERBOTEN, SOWEIT NICHT AUSDRUECKLICH GESTATTET.
ZUWIDERHANDLUNGEN VERPFLICHTEN ZU SCHADENERSATZ. ALLE RECHTE FUER DEN FALL DER PATENT-, GEBRAUCHSMUSTER- ODER GESCHMACKSMUSTEREINTRAGUNG VORBEHALTEN.
THE REPRODUCTION, DISTRIBUTION AND UTILIZATION OF THIS DOCUMENT AS WELL AS THE COMMUNICATION OF ITS CONTENTS TO OTHERS WITHOUT EXPLICID AUTHORIZATION IS PROHIBITED.
OFFENDERS WILL BE HELD LIABLE FOR THE PAYMENT OF DAMAGES. WEIDMUELLER EXCLUSIVELY RESERVES THE RIGHT TO FILE FOR PATENTS, UTILITY MODELS OR DESIGNS.
© WEIDMUELLER INTERFACE GmbH & Co.KG

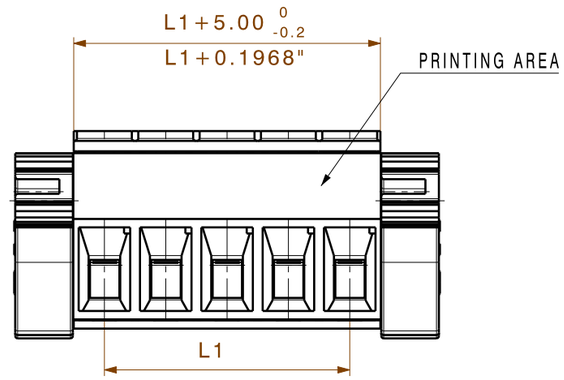

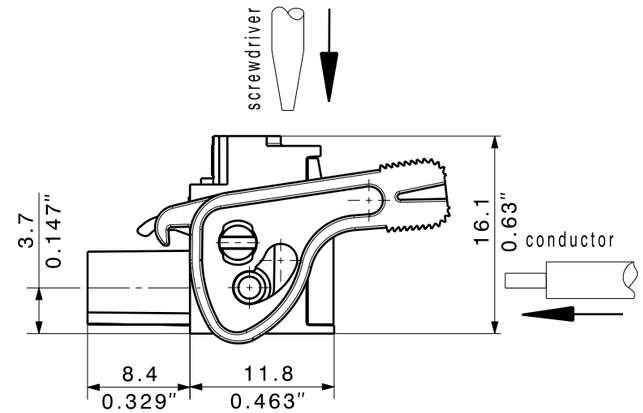

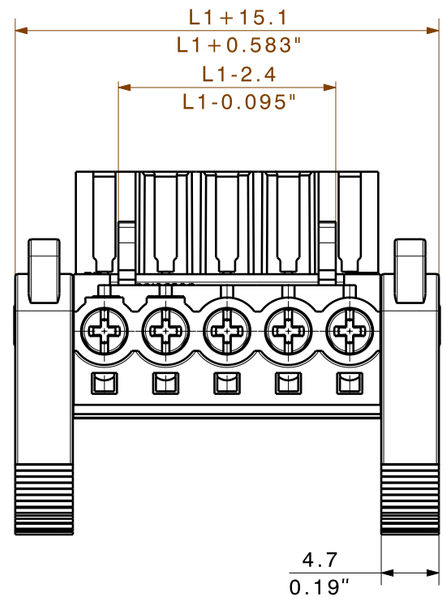

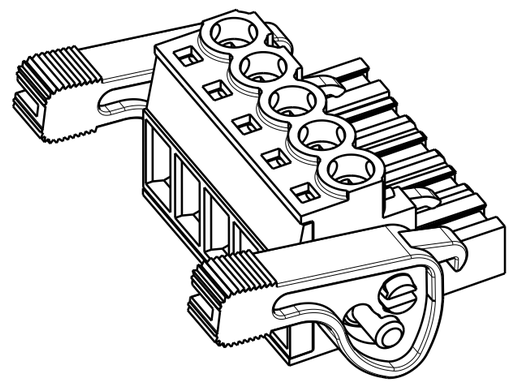

n	L1 [mm]	L1 [Inch]	L4[mm]
24	115,00	4,530	130,100
23	110,00	4,333	125,100
22	105,00	4,136	120,100
21	100,00	3,939	115,100
20	95,00	3,742	110,100
19	90,00	3,545	105,100
18	85,00	3,348	100,100
17	80,00	3,151	95,100
16	75,00	2,954	90,100
15	70,00	2,757	85,100
14	65,00	2,560	80,100
13	60,00	2,363	75,100
12	55,00	2,166	70,100
11	50,00	1,969	65,100
10	45,00	1,772	60,100
9	40,00	1,575	55,100
8	35,00	1,378	50,100
7	30,00	1,181	45,100
6	25,00	0.984	40,100
5	20,00	0.787	35,100
4	15,00	0.590	30,100
3	10,00	0.393	25,100
2	5,00	0.196	20,100

P = 5.00 RASTER/PITCH

n = POLZAHL/NO OF POLES

For the mounting of PCBs, it should be noted that the rated data given in the catalogue relates only to the connection elements. The neccessary creepage and clearance paths must be observed in connection with the respective applicant in accordance to VDE 0110. The current-carrying capacity and pitch tolerance is to be determined according to DIN IEC 326 part 3 very fine.

Weidmüller connectors are tested to the DIN VDE 0627 standard, and are valid for its field of application. Provided that the connectors are used to the intended purpose, all requirements with respect to the occuring of electrical, mechanical, thermic and corrosive stress will be satisfied.

SHOWN: BLZP 5.00HC/05/180LR

GENERAL TOLERANCE:
DIN ISO 2768-m

RoHS COMPLIANT

78305/4
10.06.15 HERTEL_S 01

MODIFICATION

Weidmüller

CAT.NO.: .

C 42480 09
DRAWING NO. ISSUE NO.

SHEET 02 OF 03 SHEETS

	DATE	NAME
DRAWN	10.06.2015	HERTEL_S
RESPONSIBLE		KRUG_M
CHECKED	15.06.2015	HELIS_MA
APPROVED		LANG_T

SCALE: 2:1

SUPERSEDES: .

BLZP 5.00HC/../180..

BUCHSENLEISTE
SOCKET BLOCK

PRODUCT FILE: BLZP 5.0X WG 180 7157