OMNIMATE Signal - series LM
LM 5.08/02/90 3.5SN OR BX

Weidmüller Interface GmbH & Co. KG
Klingenbergstraße 26
D-32758 Detmold
Germany
Fon: +49 5231 14-0
Fax: +49 5231 14-292083
www.weidmueller.com

Product image

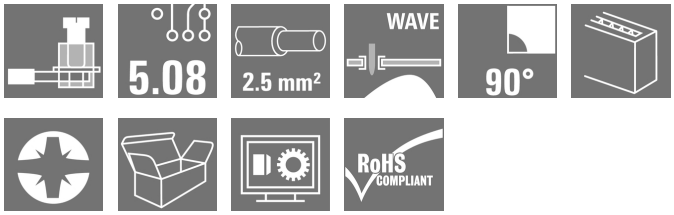

Similar to illustration

PCB terminal with proven clamping yoke connection at 5.00 and 5.08 mm pitch. Conductor outlet direction 90°, 135° and 180°. Suitable for conductor cross-sections up to 2.5 mm².

General ordering data

Type	LM 5.08/02/90 3.5SN OR BX
Order No.	1716080000
Version	Printed circuit board terminals, 5.08 mm, Number of poles: 2, 90°, Solder pin length (l): 3.5 mm, tinned, orange, Clamping yoke connection, Clamping range, max. : 2.5 mm², Box
GTIN (EAN)	4008190365370
Qty.	500 pc(s).
Product data	IEC: 630 V / 17.5 A / 0.2 - 2.5 mm² UL: 300 V / 15 A / AWG 24 - AWG 14
Packaging	Box

Creation date May 3, 2020 11:51:55 AM CEST

OMNIMATE Signal - series LM
LM 5.08/02/90 3.5SN OR BX

Weidmüller Interface GmbH & Co. KG
Klingenbergstraße 26
D-32758 Detmold
Germany
Fon: +49 5231 14-0
Fax: +49 5231 14-292083
www.weidmueller.com

Technical data

Dimensions and weights

Width	10.71 mm	Width (inches)	0.422 inch
Height	17.3 mm	Height (inches)	0.681 inch
Height of lowest version	13.8 mm	Depth	10 mm
Depth (inches)	0.394 inch	Net weight	2.43 g

System parameters

Product family	OMNIMATE Signal - series LM	Wire connection method	Clamping yoke connection
Mounting onto the PCB	THT solder connection	Conductor outlet direction	90°
Pitch in mm (P)	5.08 mm	Pitch in inches (P)	0.2 inch
Number of poles	2	Fitted by customer	Yes
Max. adjacent poles per row	24	Solder pin length (l)	3.5 mm
Solder pin dimensions	0.95 x 0.8 mm	Solder eyelet hole diameter (D)	1.3 mm
Solder eyelet hole diameter tolerance (D)	+ 0,1 mm	Number of solder pins per pole	1
Screwdriver blade	0.6 x 3.5	Screwdriver blade standard	DIN 5264
Tightening torque, min.	0.4 Nm	Tightening torque, max.	0.5 Nm
Clamping screw	M 2.5	Stripping length	6 mm
L1 in mm	5.08 mm	L1 in inches	0.2 inch
Touch-safe protection acc. to DIN VDE 0470	IP 20	Touch-safe protection acc. to DIN VDE 57 106	Safe from finger touch
Volume resistance	1.20 mΩ		

Material data

Insulating material	Wemid (PA)	Colour	orange
Colour chart (similar)	RAL 2000	Insulating material group	I
Comparative Tracking Index (CTI)	≥ 600	Insulation strength	≥ 10^8 Ω
UL 94 flammability rating	V-0	GWIT	960 °C
GWFI	960 °C	Contact material	Copper alloy
Contact surface	tinned	Coating	1-3 µm Ni, 4-6 µm SN
Tinning type	matt	Layer structure of solder connection	1-3 µm Ni / 4-6 µm Sn matt
Storage temperature, min.	-25 °C	Storage temperature, max.	50 °C
Max. relative humidity during storage	70 %	Operating temperature, min.	-50 °C
Operating temperature, max.	120 °C	Temperature range, installation, min.	-25 °C
Temperature range, installation, max.	120 °C		

Conductors suitable for connection

Clamping range, min.	0.2 mm²
Clamping range, max.	2.5 mm²
Wire connection cross section AWG, min.	AWG 24
Wire connection cross section AWG, max.	AWG 14
Solid, min. H05(07) V-U	0.2 mm²
Solid, max. H05(07) V-U	2.5 mm²
Flexible, min. H05(07) V-K	0.2 mm²
Flexible, max. H05(07) V-K	2.5 mm²
w. plastic collar ferrule, DIN 46228 pt 4, min.	0.25 mm²
w. plastic collar ferrule, DIN 46228 pt 4, max.	1.5 mm²
w. wire end ferrule, DIN 46228 pt 1, min.	0.25 mm²

OMNIMATE Signal - series LM
LM 5.08/02/90 3.5SN OR BX

Weidmüller Interface GmbH & Co. KG
Klingenbergstraße 26
D-32758 Detmold
Germany
Fon: +49 5231 14-0
Fax: +49 5231 14-292083
www.weidmueller.com

Technical data

w. wire end ferrule, DIN 46228 pt 1, max.	1.5 mm²		
Plug gauge in accordance with EN 60999 a x b; ø	2.4 mm x 1.5 mm; 1.9mm		
Clampable conductor	Cross-section for conductor connection	Type	fine-wired
		nominal	0.5 mm²
	wire end ferrule	Stripping length	nominal 8 mm
		Recommended wire-end ferrule	H0,5/12 OR
		Stripping length	nominal 6 mm
		Recommended wire-end ferrule	H0,5/6
	Cross-section for conductor connection	Type	fine-wired
		nominal	0.75 mm²
	wire end ferrule	Stripping length	nominal 8 mm
		Recommended wire-end ferrule	H0,75/12 W
		Stripping length	nominal 6 mm
		Recommended wire-end ferrule	H0,75/6
	Cross-section for conductor connection	Type	fine-wired
		nominal	1 mm²
	wire end ferrule	Stripping length	nominal 8 mm
		Recommended wire-end ferrule	H1,0/12 GE
		Stripping length	nominal 6 mm
		Recommended wire-end ferrule	H1,0/6
	Cross-section for conductor connection	Type	fine-wired
		nominal	0.25 mm²
	wire end ferrule	Stripping length	nominal 8 mm
		Recommended wire-end ferrule	H0,25/10 HBL
		Stripping length	nominal 5 mm
		Recommended wire-end ferrule	H0,25/5
	Cross-section for conductor connection	Type	fine-wired
		nominal	0.34 mm²
	wire end ferrule	Stripping length	nominal 8 mm
		Recommended wire-end ferrule	H0,34/10 TK
Reference text	Length of ferrules is to be chosen depending on the product and the rated voltage., The outside diameter of the plastic collar should not be larger than the pitch (P)		
Max. clamping range	2.5 mm²		

Rated data acc. to IEC

tested acc. to standard	IEC 60664-1, IEC 61984	Rated current, min. number of poles (Tu=20°C)	17.5 A
Rated current, max. number of poles (Tu=20°C)	16 A	Rated current, min. number of poles (Tu=40°C)	17.5 A
Rated current, max. number of poles (Tu=40°C)	14.2 A	Rated voltage for surge voltage class / pollution degree II/2	630 V
Rated voltage for surge voltage class / pollution degree III/2	320 V	Rated voltage for surge voltage class / pollution degree III/3	250 V
Rated impulse voltage for surge voltage class/ pollution degree II/2	4 kV	Rated impulse voltage for surge voltage class/ pollution degree III/2	4 kV
Rated impulse voltage for surge voltage class/ contamination degree III/3	4 kV	Short-time withstand current resistance	3 x 1s with 120 A

OMNIMATE Signal - series LM
LM 5.08/02/90 3.5SN OR BX

Weidmüller Interface GmbH & Co. KG
Klingenbergstraße 26
D-32758 Detmold
Germany
Fon: +49 5231 14-0
Fax: +49 5231 14-292083
www.weidmueller.com

Technical data

Rated data acc. to CSA

Institute (CSA)		Certificate No. (CSA)	
			200039-1815154
Rated voltage (Use group B / CSA)	300 V	Rated voltage (Use group D / CSA)	300 V
Rated current (Use group B / CSA)	18 A	Rated current (Use group D / CSA)	10 A
Wire cross-section, AWG, min.	AWG 24	Wire cross-section, AWG, max.	AWG 14
Reference to approval values	Specifications are maximum values, details - see approval certificate.		

Rated data acc. to UL 1059

Institute (cURus)		Certificate No. (cURus)	
			E60693
Rated voltage (Use group B / UL 1059)	300 V	Rated voltage (Use group D / UL 1059)	300 V
Rated current (Use group B / UL 1059)	15 A	Rated current (Use group D / UL 1059)	10 A
Wire cross-section, AWG, min.	AWG 24	Wire cross-section, AWG, max.	AWG 14
Reference to approval values	Specifications are maximum values, details - see approval certificate.		

Packing

Packaging	Box	VPE length	40 mm
VPE width	130 mm	VPE height	190 mm

Classifications

ETIM 6.0	EC002643	ETIM 7.0	EC002643
eClass 9.0	27-44-04-01	eClass 9.1	27-44-04-01
eClass 10.0	27-44-04-01	UNSPSC	30-21-18-01

Notes

Notes	• Rated current related to rated cross-section & min. No. of poles. • Wire end ferrule without plastic collar to DIN 46228/1 • Wire end ferrule with plastic collar to DIN 46228/4 • P on drawing = pitch • Rated data refer only to the component itself. Clearance and creepage distances to other components are to be designed in accordance with the relevant application standards. • It is necessary to hold the insulating body of the one or two pole terminal when tightening the screw
IPC conformity	Conformity: The products are developed, manufactured and delivered according international recognized standards and norms and comply with the assured properties in the data sheet resp. fulfill decorative properties in accordance with IPC-A-610 "Class 2". Further claims on the products can be evaluated on request.

OMNIMATE Signal - series LM
LM 5.08/02/90 3.5SN OR BX

Weidmüller Interface GmbH & Co. KG
Klingenbergstraße 26
D-32758 Detmold
Germany
Fon: +49 5231 14-0
Fax: +49 5231 14-292083
www.weidmueller.com

Technical data

Approvals

Approvals	
ROHS	Conform

Downloads

Approval/Certificate/Document of Conformity	Declaration of the Manufacturer
Brochure/Catalogue	FL DRIVES EN FL ANALO.SIGN.CONV. EN MB DEVICE MANUF. EN FL DRIVES DE CAT 2 PORTFOLIOGUIDE EN FL BUILDING SAFETY EN FL APPL LED LIGHTING EN FL INDUSTR.CONTROLS EN FL MACHINE SAFETY EN FL HEATING ELECTR EN FL APPL_INVERTER EN FL_BASE_STATION_EN FL ELEVATOR EN FL POWER SUPPLY EN FL 72H SAMPLE SER EN PO OMNIMATE EN
Engineering Data	EPLAN, WSCAD, Zuken E3.S
Engineering Data	LM.zip STEP

OMNIMATE Signal - series LM
LM 5.08/02/90 3.5SN OR BX

Weidmüller Interface GmbH & Co. KG
Klingenbergstraße 26
D-32758 Detmold
Germany
Fon: +49 5231 14-0
Fax: +49 5231 14-292083
www.weidmueller.com

Drawings

Dimensional drawing

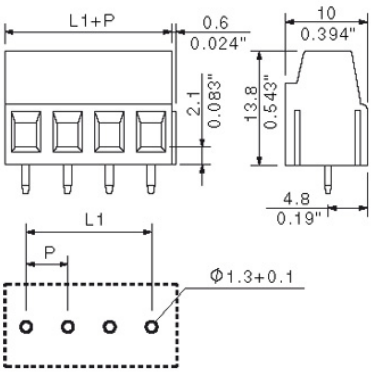

Graph

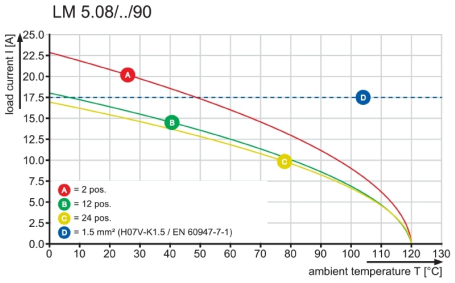

OMNIMATE Signal - series LM
LM 5.08/02/90 3.5SN OR BX

Weidmüller Interface GmbH & Co. KG
Klingenbergstraße 26
D-32758 Detmold
Germany
Fon: +49 5231 14-0
Fax: +49 5231 14-292083
www.weidmueller.com

Accessories

Slotted screwdriver

Slotted screwdriver with rounded blade SD DIN 5265, ISO 2380/2, output to DIN 5264, ISO 2380/1. ChromTop tip, SoftFinish grip

General ordering data

Type	SDS 0.6X3.5X100	Version
Order No.	9008330000	Screwdriver, Blade width (B): 3.5 mm, Blade length: 100 mm, Blade
GTIN (EAN)	4032248056286	thickness (A): 0.6 mm
Qty.	1 pc(s).	

Slotted screwdriver

VDE insulated slot-head screwdriver, SDI DIN 7437, ISO 2380/2, drive output acc. to DIN 5264, ISO 2380/1. SoftFinish grip

General ordering data

Type	SDIS 0.6X3.5X100	Version
Order No.	9008390000	Screwdriver, Blade width (B): 3.5 mm, Blade length: 100 mm, Blade
GTIN (EAN)	4032248056354	thickness (A): 0.6 mm
Qty.	1 pc(s).	

MASSE OHNE TOLERANZ SIND KEINE PRUEFMASSE
DIMS. WITHOUT TOLERANCE ARE NOT CONTROL DIMS.

LM5.00/.../90...

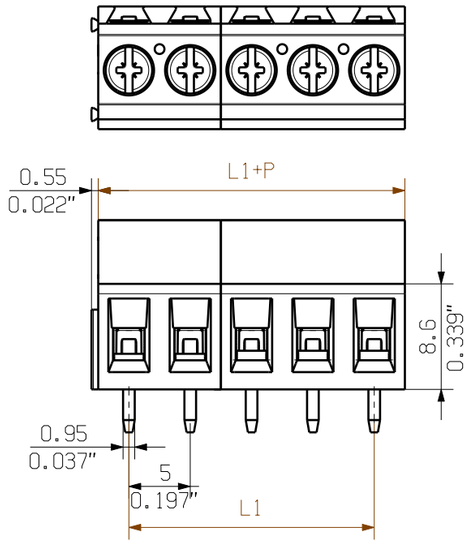

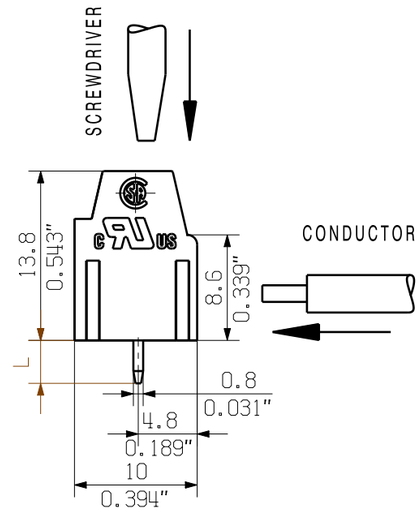

STIFTLÄNGE L PIN LENGTH L	TOLERANZ TOLERANCE
3.5	0.2
	-0.2

LM5.08/.../90...

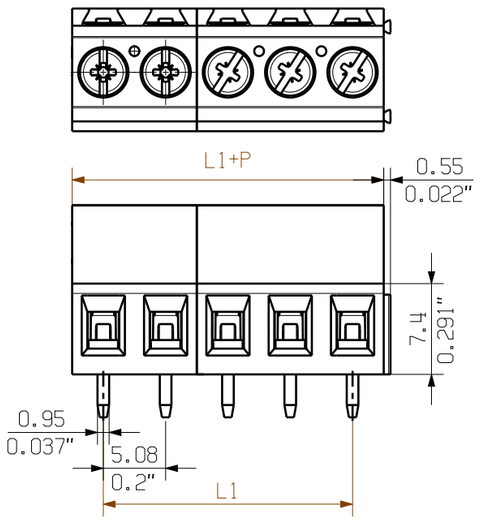

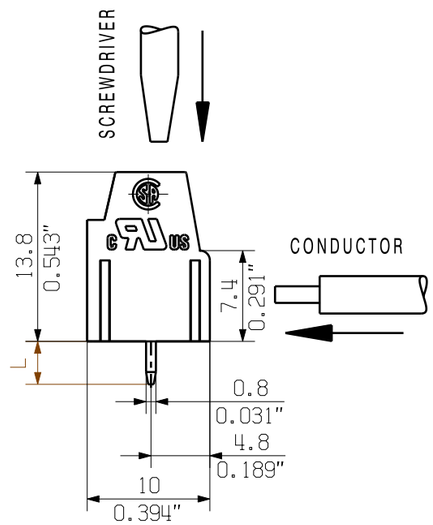

N	L1 [mm]	L1 [inch]	L1 [mm]	L1 [inch]
	P=5.00 mm, 0.197inch		P=5.08mm, 0.200 inch	
24	115.00	4.528	116.84	4.600
23	110.00	4.331	111.76	4.400
22	105.00	4.134	106.68	4.200
21	100.00	3.937	101.60	4.000
20	95.00	3.740	96.52	3.800
19	90.00	3.543	91.44	3.600
18	85.00	3.346	86.36	3.400
17	80.00	3.150	81.28	3.200
16	75.00	2.953	76.20	3.000
15	70.00	2.756	71.12	2.800
14	65.00	2.559	66.04	2.600
13	60.00	2.362	60.96	2.400
12	55.00	2.165	55.88	2.200
11	50.00	1.969	50.80	2.000
10	45.00	1.772	45.72	1.800
9	40.00	1.575	40.64	1.600
8	35.00	1.378	35.56	1.400
7	30.00	1.181	30.48	1.200
6	25.00	0.984	25.40	1.000
5	20.00	0.787	20.32	0.800
4	15.00	0.591	15.24	0.600
3	10.00	0.394	10.16	0.400
2	5.00	0.197	5.08	0.200

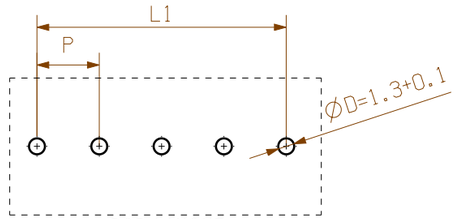

PCB LAYOUT

KUNDENZEICHNUNG
CUSTOMER DRAWING

For the mounting of PCBs, it should be noted that the rated data relates only to the PCB components alone.
The neccessary creepage and clearance paths must be observed in connection with the respective applicant in accordance to IEC 664 / VDE 0110.
The current-carrying capacity and pitch tolerance is to be determined according to DIN IEC 326 part 3 very fine.

Weidmüller PCB components are tested to the DIN EN 61984 standard, and are valid for its field of application. Provided that the components are used to the intended purpose, all requirements with respect to the occuring of electrical, mechanical, thermic and corrosive stress will be satisfied.

GENERAL TOLERANCE:
DIN ISO 2768-m

RoHS COMPLIANT

MAX. NRN./NOS.

76680/5
17.07.14 MA_J 00
MODIFICATION

CAT.NO.:.

Weidmüller

C 41708 (10)
DRAWING NO. ISSUE NO.
SHEET 01 OF 01 SHEETS

	DATE	NAME
DRAWN	30.03.2005	XU_S
RESPONSIBLE		WU_M
CHECKED		ZHOU_N
APPROVED		XU_S

SCALE: 2/1
SUPERSEDES: .

LM 5.../.../90 ...

LEITERPLATTENKLEMME
PCB TERMINAL

PRODUCT FILE: LM 7065

WEITERGABE SOWIE VERVIELFAELTIGUNG DIESES DOKUMENTS, VERWERTUNG UND MITTEILUNG SEINES INHALTS SIND VERBOTEN, SOWEIT NICHT AUSDRUECKLICH GESTATTET.
ZUWIDERHANDLUNGEN VERPFLICHTEN ZU SCHADENERSATZ. ALLE RECHTE FUER DEN FALL DER PATENT-, GEBRAUCHSMUSTER- ODER GESCHMACKSMUSTEREINTRAGUNG VORBEHALTEN.
THE REPRODUCTION, DISTRIBUTION AND UTILIZATION OF THIS DOCUMENT AS WELL AS THE COMMUNICATION OF ITS CONTENTS TO OTHERS WITHOUT EXPLICID AUTHORIZATION IS PROHIBITED.
OFFENDERS WILL BE HELD LIABLE FOR THE PAYMENT OF DAMAGES. WEIDMUELLER EXCLUSIVELY RESERVES THE RIGHT TO FILE FOR PATENTS, UTILITY MODELS OR DESIGNS.
© WEIDMUELLER INTERFACE GmbH & Co.KG

Recommended wave solderding profiles

Weidmüller Interface GmbH & Co. KG
Klingenbergstraße 16
D-32758 Detmold
Germany
Fon: +49 5231 14-0
Fax: +49 5231 14-292083
www.weidmueller.com

Single Wave:

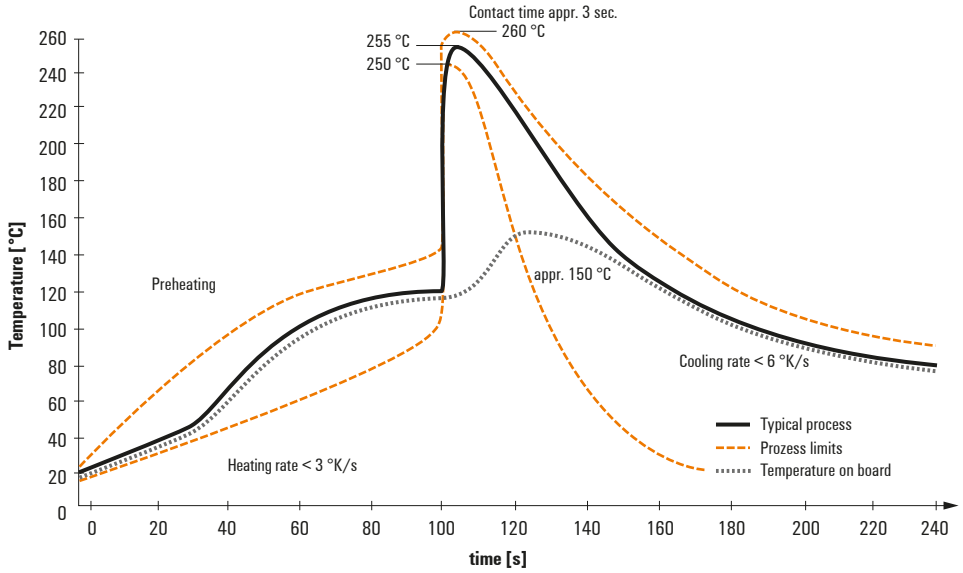

Double Wave:

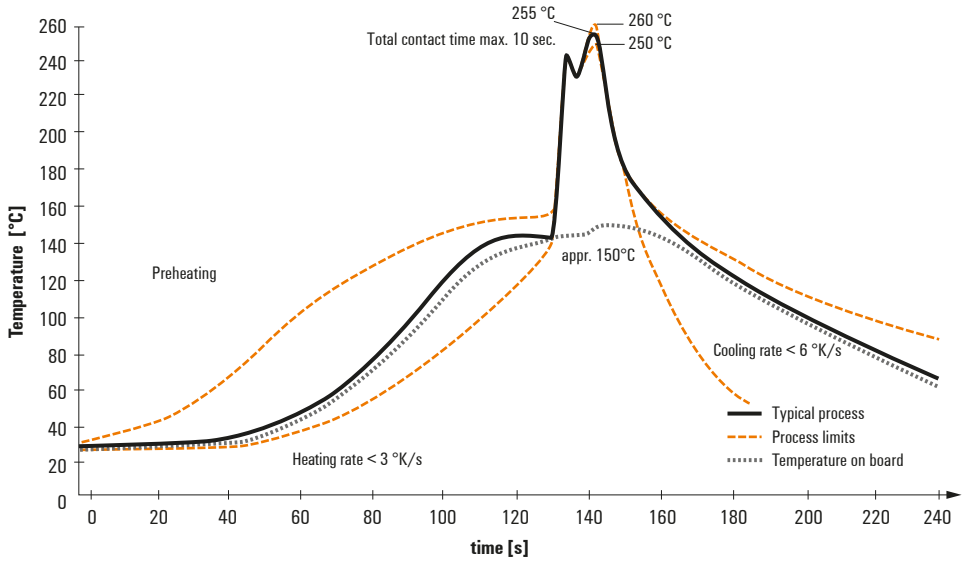

Wave soldering profiles

Wired connection elements should be processed in accordance with the DIN EN 61760-1 standard. We have included two recommendations for practical wave soldering profiles, with which Weidmüller PCB terminals and connectors are qualified.

When choosing a suitable profile for your application, the following factors also need to be considered:
- PCB thickness
- Proportion of Cu in the layers
- Single/double-sided assembly
- Product range
- Heating and cooling rates

The single and double wave profiles each indicate the recommended operating range, including the maximum soldering temperature of 260°C. In practice, the maximum soldering temperature is quite often well below the above maximum profile.

We reserve the right to make technical changes.