OMNIMATE Signal - series BL/SL 3.50
BL 3.50/15/270F SN OR BX

Weidmüller Interface GmbH & Co. KG
Klingenbergstraße 26
D-32758 Detmold
Germany
Fon: +49 5231 14-0
Fax: +49 5231 14-292083
www.weidmueller.com

Product image

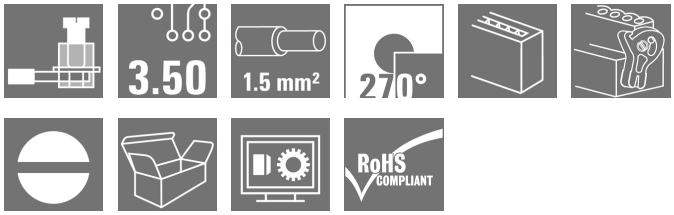

Similar to illustration

Female connectors with clamping yoke screw system for connecting conductors at 3.50 mm pitch. They provide space for labelling and can be coded.

General ordering data

Type	BL 3.50/15/270F SN OR BX
Order No.	1640060000
Version	PCB plug-in connector, female plug, 3.50 mm, Number of poles: 15, 270°, Clamping yoke connection, Clamping range, max. : 1.5 mm², Box
GTIN (EAN)	4008190277611
Qty.	30 pc(s).
Product data	IEC: 320 V / 12 A / 0.2 - 1.5 mm² UL: 300 V / 8 A / AWG 28 - AWG 14
Packaging	Box

Creation date May 3, 2020 5:21:36 PM CEST

OMNIMATE Signal - series BL/SL 3.50
BL 3.50/15/270F SN OR BX

Weidmüller Interface GmbH & Co. KG
Klingenbergstraße 26
D-32758 Detmold
Germany
Fon: +49 5231 14-0
Fax: +49 5231 14-292083
www.weidmueller.com

Technical data

Dimensions and weights

Width	59.5 mm	Width (inches)	2.343 inch
Height	12 mm	Height (inches)	0.472 inch
Depth	22.45 mm	Depth (inches)	0.884 inch
Net weight	15.4 g		

System Parameters

Product family	OMNIMATE Signal - series BL/SL 3.50	Type of connection	Field connection
Wire connection method	Clamping yoke connection	Pitch in mm (P)	3.5 mm
Pitch in inches (P)	0.138 inch	Conductor outlet direction	270°
Number of poles	15	L1 in mm	49 mm
L1 in inches	1.929 inch	Number of rows	1
Pin series quantity	1	Rated cross-section	1.5 mm²
Touch-safe protection acc. to DIN VDE 57 106	Safe from finger touch	Touch-safe protection acc. to DIN VDE 0470	IP 20
Volume resistance	≤ 5mΩ	Can be coded	Yes
Stripping length	6 mm	Tightening torque for screw flange, min.	0.15 Nm
Tightening torque for screw flange, max.	0.2 Nm	Tightening torque, min.	0.2 Nm
Tightening torque, max.	0.25 Nm	Clamping screw	M 2
Screwdriver blade	0.4 x 2.5	Screwdriver blade standard	DIN 5264
Plugging cycles	25	Plugging force/pole, max.	7 N
Pulling force/pole, max.	5 N		

Material data

Insulating material	PBT	Colour	orange
Colour chart (similar)	RAL 2000	Insulating material group	IIIa
Comparative Tracking Index (CTI)	≥ 200	Insulation strength	≥ 10^8 Ω
UL 94 flammability rating	V-0	GWFI	960 °C
Contact material	Copper alloy	Contact surface	tinned
Layer structure of plug contact	4-8 µm Sn hot-dip tinned	Storage temperature, min.	-25 °C
Storage temperature, max.	50 °C	Max. relative humidity during storage	70 %
Operating temperature, min.	-50 °C	Operating temperature, max.	100 °C
Temperature range, installation, min.	-30 °C	Temperature range, installation, max.	100 °C

Conductors suitable for connection

Clamping range, min.	0.08 mm²
Clamping range, max.	1.5 mm²
Wire connection cross section AWG, min.	AWG 28
Wire connection cross section AWG, max.	AWG 14
Solid, min. H05(07) V-U	0.2 mm²
Solid, max. H05(07) V-U	1.5 mm²
Flexible, min. H05(07) V-K	0.2 mm²
Flexible, max. H05(07) V-K	1.5 mm²
w. plastic collar ferrule, DIN 46228 pt 4, min.	0.2 mm²
w. plastic collar ferrule, DIN 46228 pt 4, max.	1.5 mm²
w. wire end ferrule, DIN 46228 pt 1, min.	0.2 mm²
w. wire end ferrule, DIN 46228 pt 1, max.	1.5 mm²

OMNIMATE Signal - series BL/SL 3.50
BL 3.50/15/270F SN OR BX

Weidmüller Interface GmbH & Co. KG
Klingenbergstraße 26
D-32758 Detmold
Germany
Fon: +49 5231 14-0
Fax: +49 5231 14-292083
www.weidmueller.com

Technical data

Plug gauge in accordance with EN 60999 a x b; ø	2.4 mm x 1.5 mm		
Clampable conductor	Cross-section for conductor connection	Type	fine-wired
		nominal	0.5 mm²
	wire end ferrule	Stripping length	nominal 8 mm
		Recommended wire-end ferrule	H0,5/12 OR
		Stripping length	nominal 6 mm
		Recommended wire-end ferrule	H0,5/6
	Cross-section for conductor connection	Type	fine-wired
		nominal	0.75 mm²
	wire end ferrule	Stripping length	nominal 8 mm
		Recommended wire-end ferrule	H0,75/12 W
		Stripping length	nominal 6 mm
		Recommended wire-end ferrule	H0,75/6
	Cross-section for conductor connection	Type	fine-wired
		nominal	1 mm²
	wire end ferrule	Stripping length	nominal 8 mm
		Recommended wire-end ferrule	H1,0/12 GE
		Stripping length	nominal 6 mm
		Recommended wire-end ferrule	H1,0/6
	Cross-section for conductor connection	Type	fine-wired
		nominal	0.25 mm²
	wire end ferrule	Stripping length	nominal 8 mm
		Recommended wire-end ferrule	H0,25/10 HBL
		Stripping length	nominal 5 mm
		Recommended wire-end ferrule	H0,25/5
	Cross-section for conductor connection	Type	fine-wired
		nominal	0.34 mm²
	wire end ferrule	Stripping length	nominal 8 mm
		Recommended wire-end ferrule	H0,34/10 TK
Reference text	The outside diameter of the plastic collar should not be larger than the pitch (P), Length of ferrules is to be chosen depending on the product and the rated voltage.		
Max. clamping range	1.5 mm²		

Rated data acc. to IEC

tested acc. to standard	IEC 60664-1, IEC 61984	Rated current, min. number of poles (Tu=20°C)	12 A
Rated current, max. number of poles (Tu=20°C)	10 A	Rated current, min. number of poles (Tu=40°C)	10 A
Rated current, max. number of poles (Tu=40°C)	8 A	Rated voltage for surge voltage class / pollution degree II/2	320 V
Rated voltage for surge voltage class / pollution degree III/2	160 V	Rated voltage for surge voltage class / pollution degree III/3	160 V
Rated impulse voltage for surge voltage class/ pollution degree II/2	2.5 kV	Rated impulse voltage for surge voltage class/ pollution degree III/2	2.5 kV
Rated impulse voltage for surge voltage class/ contamination degree III/3	2.5 kV	Short-time withstand current resistance	3 x 1s with 100 A

OMNIMATE Signal - series BL/SL 3.50
BL 3.50/15/270F SN OR BX

Weidmüller Interface GmbH & Co. KG
Klingenbergstraße 26
D-32758 Detmold
Germany
Fon: +49 5231 14-0
Fax: +49 5231 14-292083
www.weidmueller.com

Technical data

Rated data acc. to CSA

Institute (CSA)		Certificate No. (CSA)	
			154685-1318353
Rated voltage (Use group B / CSA)	300 V	Rated voltage (Use group D / CSA)	300 V
Rated current (Use group B / CSA)	10 A	Rated current (Use group D / CSA)	10 A
Wire cross-section, AWG, min.	AWG 28	Wire cross-section, AWG, max.	AWG 14
Reference to approval values	Specifications are maximum values, details - see approval certificate.		

Rated data acc. to UL 1059

Institute (UR)		Certificate No. (UR)	
			E60693
Rated voltage (Use group B / UL 1059)	300 V	Rated voltage (Use group D / UL 1059)	300 V
Rated current (Use group B / UL 1059)	8 A	Rated current (Use group D / UL 1059)	8 A
Wire cross-section, AWG, min.	AWG 28	Wire cross-section, AWG, max.	AWG 14
Reference to approval values	Specifications are maximum values, details - see approval certificate.		

Packing

Packaging	Box	VPE length	77 mm
VPE width	95 mm	VPE height	140 mm

Classifications

ETIM 6.0	EC002638	ETIM 7.0	EC002638
eClass 9.0	27-44-03-09	eClass 9.1	27-44-03-09
eClass 10.0	27-44-03-09	UNSPSC	30-21-18-10

OMNIMATE Signal - series BL/SL 3.50
BL 3.50/15/270F SN OR BX

Weidmüller Interface GmbH & Co. KG
Klingenbergstraße 26
D-32758 Detmold
Germany
Fon: +49 5231 14-0
Fax: +49 5231 14-292083
www.weidmueller.com

Technical data

Notes

Notes	• Additional colours on request • Gold-plated contact surfaces on request • Rated current related to rated cross-section & min. No. of poles. • Max. outer diameter of the conductor: 2.9 mm • Wire end ferrule without plastic collar to DIN 46228/1 • Wire end ferrule with plastic collar to DIN 46228/4 • P on drawing = pitch • Rated data refer only to the component itself. Clearance and creepage distances to other components are to be designed in accordance with the relevant application standards.
IPC conformity	Conformity: The products are developed, manufactured and delivered according international recognized standards and norms and comply with the assured properties in the data sheet resp. fulfill decorative properties in accordance with IPC-A-610 "Class 2". Further claims on the products can be evaluated on request.

Approvals

Approvals	
ROHS	Conform

Downloads

Approval/Certificate/Document of Conformity	Declaration of the Manufacturer
Brochure/Catalogue	FL DRIVES EN MB DEVICE MANUF. EN FL DRIVES DE CAT 2 PORTFOLIOGUIDE EN FL BUILDING SAFETY EN FL APPL LED LIGHTING EN FL INDUSTR.CONTROLS EN FL MACHINE SAFETY EN FL HEATING ELECTR EN FL APPL_INVERTER EN FL_BASE_STATION_EN FL ELEVATOR EN FL POWER SUPPLY EN FL 72H SAMPLE SER EN PO OMNIMATE EN
Engineering Data	EPLAN, WSCAD
Engineering Data	STEP

OMNIMATE Signal - series BL/SL 3.50
BL 3.50/15/270F SN OR BX

Weidmüller Interface GmbH & Co. KG
Klingenbergstraße 26
D-32758 Detmold
Germany
Fon: +49 5231 14-0
Fax: +49 5231 14-292083
www.weidmueller.com

Drawings

Dimensional drawing

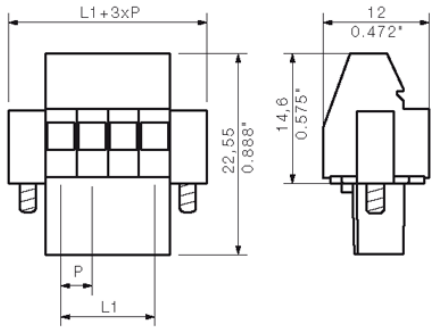

Graph

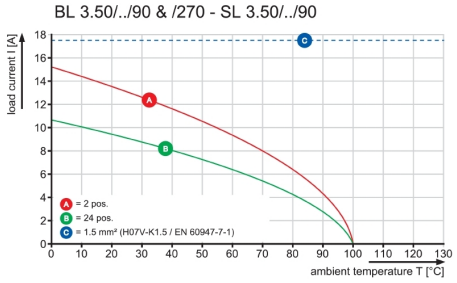

Graph

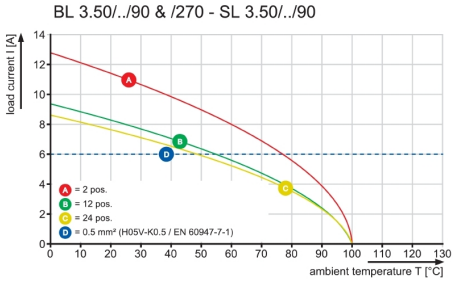

OMNIMATE Signal - series BL/SL 3.50
BL 3.50/15/270F SN OR BX

Weidmüller Interface GmbH & Co. KG
Klingenbergstraße 26
D-32758 Detmold
Germany
Fon: +49 5231 14-0
Fax: +49 5231 14-292083
www.weidmueller.com

Mating connector (conditionally pluggable)

SL-SMT 3.5/90G Tray

High-temperature-resistant male header, 3.50 mm pitch.

- **Plugging direction parallel (90°), straight 180° or angled (135°) to PCB**
- **Housing variants: closed side (G), screw flange (F), solder flange (LF) or snap-on solder flange (RF)**
- **Optimised for the SMT process**
- **Pin length 3.2 mm universal for all soldering methods**
- **Pin length 1.5 mm optimised for reflow soldering methods**
- **Packed either in a box (BX) or tape-on-reel (RL)**
- **Male header can be coded**

General ordering data

Type	SL-SMT 3.50/15/90G 1.5S ...	Version	Product data	Packaging
Order No.	1761673001	PCB plug-in connector, male header, closed side, THT/THR solder	IEC: 320 V / 15 A	Tray
GTIN (EAN)	4032248133949	connection, 3.50 mm, Number of poles: 15, 90°, Solder pin length (l):	UL: 300 V / 10 A	
Qty.	30 pc(s).	1.5 mm, tinned, black, Tray		

SL-THR 3.5/135F

High-temperature-resistant male header, 3.50 mm pitch.

- **Plugging direction parallel (90°), straight 180° or angled (135°) to PCB**
- **Housing variants: closed side (G), screw flange (F), solder flange (LF) or snap-on solder flange (RF)**
- **Optimised for the SMT process**
- **Pin length 3.2 mm universal for all soldering methods**
- **Pin length 1.5 mm optimised for reflow soldering methods**
- **Packed either in a box (BX) or tape-on-reel (RL)**
- **Male header can be coded**

General ordering data

Type	SL-SMT 3.50/15/135F 3.2 ...	Version	Product data	Packaging
Order No.	1003650000	PCB plug-in connector, male header, Flange, THT/THR solder	IEC: 320 V / 15 A	Box
GTIN (EAN)	4032248700271	connection, 3.50 mm, Number of poles: 15, 135°, Solder pin length	UL: 300 V / 10 A	
Qty.	30 pc(s).	(l): 3.2 mm, tinned, black, Box		

OMNIMATE Signal - series BL/SL 3.50
BL 3.50/15/270F SN OR BX

Weidmüller Interface GmbH & Co. KG
Klingenbergstraße 26
D-32758 Detmold
Germany
Fon: +49 5231 14-0
Fax: +49 5231 14-292083
www.weidmueller.com

Mating connector (conditionally pluggable)

SL 3.50/180G

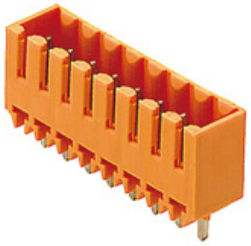

Pin headers for wave soldering in 3.50 mm pitch

- Plugging direction is parallel (90°), straight 180° or angled (135°) to the PCB
- Housing variant: screw flange (F)
- Packed in a cardboard box (BX)
- Pin header can be coded

General ordering data

Type	SL 3.50/15/180G 4.5SN B ...	Version	Product data	Packaging
Order No.	1616130000	PCB plug-in connector, male header, closed side, THT solder	IEC: 320 V / 17 A	Box
GTIN (EAN)	4008190067588	connection, 3.50 mm, Number of poles: 15, 180°, Solder pin length	UL: 300 V / 10 A	
Qty.	50 pc(s).	(l): 4.5 mm, tinned, black, Box		
Type	SL 3.50/15/180G 3.2SN O ...	Version	Product data	Packaging
Order No.	1604600000	PCB plug-in connector, male header, closed side, THT solder	IEC: 320 V / 17 A	Box
GTIN (EAN)	4008190003999	connection, 3.50 mm, Number of poles: 15, 180°, Solder pin length	UL: 300 V / 10 A	
Qty.	50 pc(s).	(l): 3.2 mm, tinned, orange, Box		

SL 3.50/90G

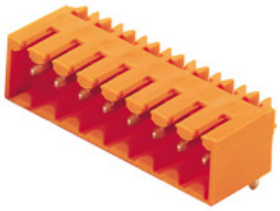

Pin headers for wave soldering in 3.50 mm pitch

- Plugging direction is parallel (90°), straight 180° or angled (135°) to the PCB
- Housing variant: screw flange (F)
- Packed in a cardboard box (BX)
- Pin header can be coded

General ordering data

Type	SL 3.50/15/90G 4.5SN OR ...	Version	Product data	Packaging
Order No.	1605350000	PCB plug-in connector, male header, closed side, THT solder	IEC: / 17 A	Box
GTIN (EAN)	4008190151355	connection, 3.50 mm, Number of poles: 15, 90°, Solder pin length (l):	UL: 300 V / 10 A	
Qty.	50 pc(s).	4.5 mm, tinned, orange, Box		
Type	SL 3.50/15/90G 4.5SN BK ...	Version	Product data	Packaging
Order No.	1615520000	PCB plug-in connector, male header, closed side, THT solder	IEC: / 17 A	Box
GTIN (EAN)	4008190056391	connection, 3.50 mm, Number of poles: 15, 90°, Solder pin length (l):	UL: 300 V / 10 A	
Qty.	50 pc(s).	4.5 mm, tinned, black, Box		
Type	SL 3.50/15/90G 3.2SN OR ...	Version	Product data	Packaging
Order No.	1605200000	PCB plug-in connector, male header, closed side, THT solder	IEC: / 17 A	Box
GTIN (EAN)	4008190120665	connection, 3.50 mm, Number of poles: 15, 90°, Solder pin length (l):	UL: 300 V / 10 A	
Qty.	50 pc(s).	3.2 mm, tinned, orange, Box		
Type	SL 3.50/15/90G 3.2SN GY ...	Version	Product data	Packaging
Order No.	1619590000	PCB plug-in connector, male header, closed side, THT solder	IEC: / 17 A	Box
GTIN (EAN)	4008190142674	connection, 3.50 mm, Number of poles: 15, 90°, Solder pin length (l):	UL: 300 V / 10 A	
Qty.	50 pc(s).	3.2 mm, tinned, Pebble grey, Box		

OMNIMATE Signal - series BL/SL 3.50
BL 3.50/15/270F SN OR BX

Weidmüller Interface GmbH & Co. KG
Klingenbergstraße 26
D-32758 Detmold
Germany
Fon: +49 5231 14-0
Fax: +49 5231 14-292083
www.weidmueller.com

Mating connector (conditionally pluggable)

Type	SL 3.50/15/90G 3.2SN DK ...	Version	Product data	Packaging
Order No.	1607020000	PCB plug-in connector, male header, closed side, THT solder	IEC: / 17 A	Box
GTIN (EAN)	4008190080648	connection, 3.50 mm, Number of poles: 15, 90°, Solder pin length (l):	UL: 300 V / 10 A	
Qty.	50 pc(s).	3.2 mm, tinned, Signal green, Box		

SL-SMT 3.5/180G Box

High-temperature-resistant male header, 3.50 mm pitch.

- **Plugging direction parallel (90°), straight 180° or angled (135°) to PCB**
- **Housing variants: closed side (G), screw flange (F), solder flange (LF) or snap-on solder flange (RF)**
- **Optimised for the SMT process**
- **Pin length 3.2 mm universal for all soldering methods**
- **Pin length 1.5 mm optimised for reflow soldering methods**
- **Packed either in a box (BX) or tape-on-reel (RL)**
- **Male header can be coded**

General ordering data

Type	SL-SMT 3.50/15/180G 1.5 ...	Version	Product data	Packaging
Order No.	1753112001	PCB plug-in connector, male header, closed side, THT/THR solder	IEC: 320 V / 15 A	Box
GTIN (EAN)	4032248131013	connection, 3.50 mm, Number of poles: 15, 180°, Solder pin length	UL: 300 V / 10 A	
Qty.	50 pc(s).	(l): 1.5 mm, tinned, black, Box		
Type	SL-SMT 3.50/15/180G 3.2 ...	Version	Product data	Packaging
Order No.	1842440000	PCB plug-in connector, male header, closed side, THT/THR solder	IEC: 320 V / 15 A	Box
GTIN (EAN)	4032248353798	connection, 3.50 mm, Number of poles: 15, 180°, Solder pin length	UL: 300 V / 10 A	
Qty.	50 pc(s).	(l): 3.2 mm, tinned, black, Box		

SL 3.50/180

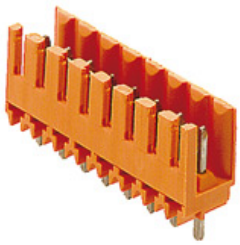

Pin headers for wave soldering in 3.50 mm pitch

- Plugging direction is parallel (90°), straight 180° or angled (135°) to the PCB
- Housing variant: screw flange (F)
- Packed in a cardboard box (BX)
- Pin header can be coded

General ordering data

Type	SL 3.50/15/180 3.2SN OR ...	Version	Product data	Packaging
Order No.	1604900000	PCB plug-in connector, male header, open side, THT solder	IEC: 320 V / 17 A	Box
GTIN (EAN)	4008190104900	connection, 3.50 mm, Number of poles: 15, 180°, Solder pin length	UL: 300 V / 10 A	
Qty.	50 pc(s).	(l): 3.2 mm, tinned, orange, Box		

OMNIMATE Signal - series BL/SL 3.50
BL 3.50/15/270F SN OR BX

Weidmüller Interface GmbH & Co. KG
Klingenbergstraße 26
D-32758 Detmold
Germany
Fon: +49 5231 14-0
Fax: +49 5231 14-292083
www.weidmueller.com

Mating connector (conditionally pluggable)

SL-SMT 3.5/180G Tray

High-temperature-resistant male header, 3.50 mm pitch.

- **Plugging direction parallel (90°), straight 180° or angled (135°) to PCB**
- **Housing variants: closed side (G), screw flange (F), solder flange (LF) or snap-on solder flange (RF)**
- **Optimised for the SMT process**
- **Pin length 3.2 mm universal for all soldering methods**
- **Pin length 1.5 mm optimised for reflow soldering methods**
- **Packed either in a box (BX) or tape-on-reel (RL)**
- **Male header can be coded**

General ordering data

Type	SL-SMT 3.50/15/180G 1.5 ...	Version	Product data	Packaging
Order No.	1753113001	PCB plug-in connector, male header, closed side, THT/THR solder	IEC: 320 V / 15 A	Tray
GTIN (EAN)	4032248132942	connection, 3.50 mm, Number of poles: 15, 180°, Solder pin length	UL: 300 V / 10 A	
Qty.	30 pc(s).	(l): 1.5 mm, tinned, black, Tray		

SL-SMT 3.5/90G Box

High-temperature-resistant male header, 3.50 mm pitch.

- **Plugging direction parallel (90°), straight 180° or angled (135°) to PCB**
- **Housing variants: closed side (G), screw flange (F), solder flange (LF) or snap-on solder flange (RF)**
- **Optimised for the SMT process**
- **Pin length 3.2 mm universal for all soldering methods**
- **Pin length 1.5 mm optimised for reflow soldering methods**
- **Packed either in a box (BX) or tape-on-reel (RL)**
- **Male header can be coded**

General ordering data

Type	SL-SMT 3.50/15/90G 1.5S ...	Version	Product data	Packaging
Order No.	1761672001	PCB plug-in connector, male header, closed side, THT/THR solder	IEC: 320 V / 15 A	Box
GTIN (EAN)	4032248132263	connection, 3.50 mm, Number of poles: 15, 90°, Solder pin length (l):	UL: 300 V / 10 A	
Qty.	50 pc(s).	1.5 mm, tinned, black, Box		

OMNIMATE Signal - series BL/SL 3.50
BL 3.50/15/270F SN OR BX

Weidmüller Interface GmbH & Co. KG
Klingenbergstraße 26
D-32758 Detmold
Germany
Fon: +49 5231 14-0
Fax: +49 5231 14-292083
www.weidmueller.com

Mating connector (conditionally pluggable)

Type	SL-SMT 3.50/15/90G 3.2S ...	Version	Product data	Packaging
Order No.	1841760000	PCB plug-in connector, male header, closed side, THT/THR solder	IEC: 320 V / 15 A	Box
GTIN (EAN)	4032248353118	connection, 3.50 mm, Number of poles: 15, 90°, Solder pin length (l):	UL: 300 V / 10 A	
Qty.	50 pc(s).	3.2 mm, tinned, black, Box		

SL 3.50/90

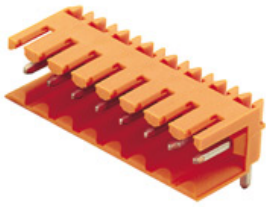

Pin headers for wave soldering in 3.50 mm pitch

- Plugging direction is parallel (90°), straight 180° or angled (135°) to the PCB
- Housing variant: screw flange (F)
- Packed in a cardboard box (BX)
- Pin header can be coded

General ordering data

Type	SL 3.50/15/90 3.2SN OR ...	Version	Product data	Packaging
Order No.	1597340000	PCB plug-in connector, male header, open side, THT solder	IEC: 320 V / 17 A	Box
GTIN (EAN)	4008190136260	connection, 3.50 mm, Number of poles: 15, 90°, Solder pin length (l):	UL: 300 V / 10 A	
Qty.	50 pc(s).	3.2 mm, tinned, orange, Box		
Type	SL 3.50/15/90 4.5SN OR ...	Version	Product data	Packaging
Order No.	1605500000	PCB plug-in connector, male header, open side, THT solder	IEC: 320 V / 17 A	Box
GTIN (EAN)	4008190188757	connection, 3.50 mm, Number of poles: 15, 90°, Solder pin length (l):	UL: 300 V / 10 A	
Qty.	50 pc(s).	4.5 mm, tinned, orange, Box		
Type	SL 3.50/15/90 3.2SN GY ...	Version	Product data	Packaging
Order No.	1619200000	PCB plug-in connector, male header, open side, THT solder	IEC: 320 V / 17 A	Box
GTIN (EAN)	4008190136000	connection, 3.50 mm, Number of poles: 15, 90°, Solder pin length (l):	UL: 300 V / 10 A	
Qty.	50 pc(s).	3.2 mm, tinned, Pebble grey, Box		
Type	SL 3.50/15/90 3.2SN DKG ...	Version	Product data	Packaging
Order No.	1606900000	PCB plug-in connector, male header, open side, THT solder	IEC: 320 V / 17 A	Box
GTIN (EAN)	4008190176969	connection, 3.50 mm, Number of poles: 15, 90°, Solder pin length (l):	UL: 300 V / 10 A	
Qty.	50 pc(s).	3.2 mm, tinned, Signal green, Box		
Type	SL 3.50/15/90 4.5SN BK ...	Version	Product data	Packaging
Order No.	1615410000	PCB plug-in connector, male header, open side, THT solder	IEC: 320 V / 17 A	Box
GTIN (EAN)	4008190054434	connection, 3.50 mm, Number of poles: 15, 90°, Solder pin length (l):	UL: 300 V / 10 A	
Qty.	50 pc(s).	4.5 mm, tinned, black, Box		

OMNIMATE Signal - series BL/SL 3.50
BL 3.50/15/270F SN OR BX

Weidmüller Interface GmbH & Co. KG
Klingenbergstraße 26
D-32758 Detmold
Germany
Fon: +49 5231 14-0
Fax: +49 5231 14-292083
www.weidmueller.com

Mating connector (conditionally pluggable)

SLD 3.50/90G

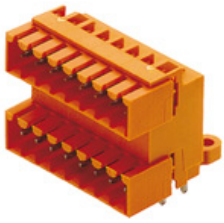

Two-tier pin header for wave soldering in 3.50 mm pitch. The connector is available in open, closed and flange versions. The male connectors provide space for labelling and can be coded. Packed in a cardboard box.

General ordering data

Type	SLD 3.50/30/90G 3.2SN O ...	Version	Product data	Packaging
Order No.	1633710000	PCB plug-in connector, male header, closed side, THT solder	IEC: 200 V / 10.5 A	Box
GTIN (EAN)	4008190258160	connection, 3.50 mm, Number of poles: 30, 90°, Solder pin length (l):	UL: 300 V / 8 A	
Qty.	10 pc(s).	3.2 mm, tinned, orange, Box		
Type	SLD 3.50/30/90G 4.5SN B ...	Version	Product data	Packaging
Order No.	1634400000	PCB plug-in connector, male header, closed side, THT solder	IEC: 200 V / 10.5 A	Box
GTIN (EAN)	4008190258856	connection, 3.50 mm, Number of poles: 30, 90°, Solder pin length (l):	UL: 300 V / 8 A	
Qty.	10 pc(s).	4.5 mm, tinned, black, Box		
Type	SLD 3.50/30/90G 3.2SN D ...	Version	Product data	Packaging
Order No.	1674980000	PCB plug-in connector, male header, closed side, THT solder	IEC: 200 V / 10.5 A	Box
GTIN (EAN)	4008190445676	connection, 3.50 mm, Number of poles: 30, 90°, Solder pin length (l):	UL: 300 V / 8 A	
Qty.	10 pc(s).	3.2 mm, tinned, Signal green, Box		

OMNIMATE Signal - series BL/SL 3.50
BL 3.50/15/270F SN OR BX

Weidmüller Interface GmbH & Co. KG
Klingenbergstraße 26
D-32758 Detmold
Germany
Fon: +49 5231 14-0
Fax: +49 5231 14-292083
www.weidmueller.com

Mating connector (fully pluggable)

SL 3.50/135F

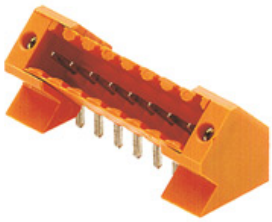

Pin headers for wave soldering in 3.50 mm pitch

- Plugging direction is parallel (90°), straight 180° or angled (135°) to the PCB
- Housing variant: screw flange (F)
- Packed in a cardboard box (BX)
- Pin header can be coded

General ordering data

Type	SL 3.50/15/135F 3.2SN O ...	Version	Product data	Packaging
Order No.	1643460000	PCB plug-in connector, male header, Flange, THT solder connection,	IEC: 320 V / 15 A	Box
GTIN (EAN)	4008190282226	3.50 mm, Number of poles: 15, 135°, Solder pin length (l): 3.2 mm,	UL: 300 V / 10 A	
Qty.	30 pc(s).	tinned, orange, Box		

SL-SMT 3.5/90LF Box

High-temperature-resistant male header, 3.50 mm pitch.

- **Plugging direction parallel (90°), straight 180° or angled (135°) to PCB**
- **Housing variants: closed side (G), screw flange (F), solder flange (LF) or snap-on solder flange (RF)**
- **Optimised for the SMT process**
- **Pin length 3.2 mm universal for all soldering methods**
- **Pin length 1.5 mm optimised for reflow soldering methods**
- **Packed either in a box (BX) or tape-on-reel (RL)**
- **Male header can be coded**

General ordering data

Type	SL-SMT 3.50/15/90LF 3.2 ...	Version	Product data	Packaging
Order No.	1841980000	PCB plug-in connector, male header, Solder flange, THT/THR solder	IEC: 320 V / 15 A	Box
GTIN (EAN)	4032248353330	connection, 3.50 mm, Number of poles: 15, 90°, Solder pin length (l):	UL: 300 V / 10 A	
Qty.	30 pc(s).	3.2 mm, tinned, black, Box		
Type	SL-SMT 3.50/15/90LF 1.5 ...	Version	Product data	Packaging
Order No.	1805070000	PCB plug-in connector, male header, Solder flange, THT/THR solder	IEC: 320 V / 15 A	Box
GTIN (EAN)	4032248268979	connection, 3.50 mm, Number of poles: 15, 90°, Solder pin length (l):	UL: 300 V / 10 A	
Qty.	30 pc(s).	1.5 mm, tinned, black, Box		

OMNIMATE Signal - series BL/SL 3.50
BL 3.50/15/270F SN OR BX

Weidmüller Interface GmbH & Co. KG
Klingenbergstraße 26
D-32758 Detmold
Germany
Fon: +49 5231 14-0
Fax: +49 5231 14-292083
www.weidmueller.com

Mating connector (fully pluggable)

SL-SMT 3.5/180F Box

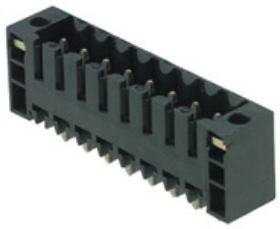

High-temperature-resistant male header, 3.50 mm pitch.

- **Plugging direction parallel (90°), straight 180° or angled (135°) to PCB**
- **Housing variants: closed side (G), screw flange (F), solder flange (LF) or snap-on solder flange (RF)**
- **Optimised for the SMT process**
- **Pin length 3.2 mm universal for all soldering methods**
- **Pin length 1.5 mm optimised for reflow soldering methods**
- **Packed either in a box (BX) or tape-on-reel (RL)**
- **Male header can be coded**

General ordering data

Type	SL-SMT 3.50/15/180F 3.2 ...	Version	Product data	Packaging
Order No.	1842900000	PCB plug-in connector, male header, Flange, THT/THR solder	IEC: 320 V / 15 A	Box
GTIN (EAN)	4032248354368	connection, 3.50 mm, Number of poles: 15, 180°, Solder pin length	UL: 300 V / 10 A	
Qty.	30 pc(s).	(l): 3.2 mm, tinned, black, Box		

SLD 3.50/90F

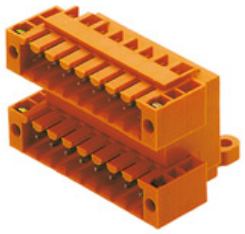

Two-tier pin header for wave soldering in 3.50 mm pitch. The connector is available in open, closed and flange versions. The male connectors provide space for labelling and can be coded. Packed in a cardboard box.

General ordering data

Type	SLD 3.50/30/90F 3.2SN O ...	Version	Product data	Packaging
Order No.	1633940000	PCB plug-in connector, male header, Flange, THT solder connection,	IEC: 200 V / 10.5 A	Box
GTIN (EAN)	4008190258399	3.50 mm, Number of poles: 30, 90°, Solder pin length (l): 3.2 mm,	UL: 300 V / 8 A	
Qty.	10 pc(s).	tinned, orange, Box		

OMNIMATE Signal - series BL/SL 3.50
BL 3.50/15/270F SN OR BX

Weidmüller Interface GmbH & Co. KG
Klingenbergstraße 26
D-32758 Detmold
Germany
Fon: +49 5231 14-0
Fax: +49 5231 14-292083
www.weidmueller.com

Mating connector (fully pluggable)

SL 3.50/180F

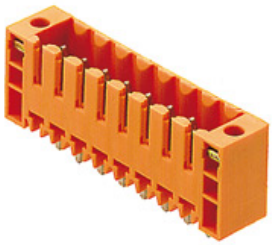

Pin headers for wave soldering in 3.50 mm pitch

- Plugging direction is parallel (90°), straight 180° or angled (135°) to the PCB
- Housing variant: screw flange (F)
- Packed in a cardboard box (BX)
- Pin header can be coded

General ordering data

Type	SL 3.50/15/180F 3.2SN G ...	Version	Product data	Packaging
Order No.	1622390000	PCB plug-in connector, male header, Flange, THT solder connection,	IEC: 320 V / 17 A	Box
GTIN (EAN)	4008190190095	3.50 mm, Number of poles: 15, 180°, Solder pin length (l): 3.2 mm,	UL: 300 V / 10 A	
Qty.	50 pc(s).	tinned, Pebble grey, Box		
Type	SL 3.50/15/180F 3.2SN O ...	Version	Product data	Packaging
Order No.	1607630000	PCB plug-in connector, male header, Flange, THT solder connection,	IEC: 320 V / 17 A	Box
GTIN (EAN)	4008190063528	3.50 mm, Number of poles: 15, 180°, Solder pin length (l): 3.2 mm,	UL: 300 V / 10 A	
Qty.	50 pc(s).	tinned, orange, Box		
Type	SL 3.50/15/180F 3.2SN D ...	Version	Product data	Packaging
Order No.	1622610000	PCB plug-in connector, male header, Flange, THT solder connection,	IEC: 320 V / 17 A	Box
GTIN (EAN)	4008190193270	3.50 mm, Number of poles: 15, 180°, Solder pin length (l): 3.2 mm,	UL: 300 V / 10 A	
Qty.	50 pc(s).	tinned, Signal green, Box		
Type	SL 3.50/15/180F 4.5SN B ...	Version	Product data	Packaging
Order No.	1616260000	PCB plug-in connector, male header, Flange, THT solder connection,	IEC: 320 V / 17 A	Box
GTIN (EAN)	4008190069728	3.50 mm, Number of poles: 15, 180°, Solder pin length (l): 4.5 mm,	UL: 300 V / 10 A	
Qty.	50 pc(s).	tinned, black, Box		
Type	SL 3.50/15/180F 4.5SN O ...	Version	Product data	Packaging
Order No.	1618810000	PCB plug-in connector, male header, Flange, THT solder connection,	IEC: 320 V / 17 A	Box
GTIN (EAN)	4008190128029	3.50 mm, Number of poles: 15, 180°, Solder pin length (l): 4.5 mm,	UL: 300 V / 10 A	
Qty.	50 pc(s).	tinned, orange, Box		

OMNIMATE Signal - series BL/SL 3.50
BL 3.50/15/270F SN OR BX

Weidmüller Interface GmbH & Co. KG
Klingenbergstraße 26
D-32758 Detmold
Germany
Fon: +49 5231 14-0
Fax: +49 5231 14-292083
www.weidmueller.com

Mating connector (fully pluggable)

SL-SMT 3.5/90F Box

High-temperature-resistant male header, 3.50 mm pitch.

- **Plugging direction parallel (90°), straight 180° or angled (135°) to PCB**
- **Housing variants: closed side (G), screw flange (F), solder flange (LF) or snap-on solder flange (RF)**
- **Optimised for the SMT process**
- **Pin length 3.2 mm universal for all soldering methods**
- **Pin length 1.5 mm optimised for reflow soldering methods**
- **Packed either in a box (BX) or tape-on-reel (RL)**
- **Male header can be coded**

General ordering data

Type	SL-SMT 3.50/15/90F 3.2S ...	Version	Product data	Packaging
Order No.	1842210000	PCB plug-in connector, male header, Flange, THT/THR solder connection, 3.50 mm, Number of poles: 15, 90°, Solder pin length (l): 3.2 mm, tinned, black, Box	IEC: 320 V / 15 A UL: 300 V / 10 A	Box
GTIN (EAN)	4032248353569			
Qty.	30 pc(s).			

SL 3.50/90F

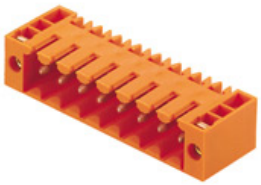

Pin headers for wave soldering in 3.50 mm pitch

- Plugging direction is parallel (90°), straight 180° or angled (135°) to the PCB
- Housing variant: screw flange (F)
- Packed in a cardboard box (BX)
- Pin header can be coded

General ordering data

Type	SL 3.50/15/90F 3.2SN GY ...	Version	Product data	Packaging
Order No.	1619980000	PCB plug-in connector, male header, Flange, THT solder connection, 3.50 mm, Number of poles: 15, 90°, Solder pin length (l): 3.2 mm, tinned, Pebble grey, Box	IEC: / 17 A UL: 300 V / 10 A	Box
GTIN (EAN)	4008190150204			
Qty.	50 pc(s).			
Type	SL 3.50/15/90F 3.2SN BK ...	Version	Product data	Packaging
Order No.	1717870000	PCB plug-in connector, male header, Flange, THT solder connection, 3.50 mm, Number of poles: 15, 90°, Solder pin length (l): 3.2 mm, tinned, black, Box	IEC: / 17 A UL: 300 V / 10 A	Box
GTIN (EAN)	4008190348557			
Qty.	50 pc(s).			
Type	SL 3.50/15/90F 4.5SN BK ...	Version	Product data	Packaging
Order No.	1615650000	PCB plug-in connector, male header, Flange, THT solder connection, 3.50 mm, Number of poles: 15, 90°, Solder pin length (l): 4.5 mm, tinned, black, Box	IEC: / 17 A UL: 300 V / 10 A	Box
GTIN (EAN)	4008190058340			
Qty.	50 pc(s).			

OMNIMATE Signal - series BL/SL 3.50
BL 3.50/15/270F SN OR BX

Weidmüller Interface GmbH & Co. KG
Klingenbergstraße 26
D-32758 Detmold
Germany
Fon: +49 5231 14-0
Fax: +49 5231 14-292083
www.weidmueller.com

Mating connector (fully pluggable)

Type	SL 3.50/15/90F 3.2SN DK ...	Version	Product data	Packaging
Order No.	1620190000	PCB plug-in connector, male header, Flange, THT solder connection,	IEC: / 17 A	Box
GTIN (EAN)	4008190152864	3.50 mm, Number of poles: 15, 90°, Solder pin length (l): 3.2 mm,	UL: 300 V / 10 A	
Qty.	50 pc(s).	tinned, Signal green, Box		
Type	SL 3.50/15/90F 4.5SN OR ...	Version	Product data	Packaging
Order No.	1618180000	PCB plug-in connector, male header, Flange, THT solder connection,	IEC: / 17 A	Box
GTIN (EAN)	4008190117337	3.50 mm, Number of poles: 15, 90°, Solder pin length (l): 4.5 mm,	UL: 300 V / 10 A	
Qty.	50 pc(s).	tinned, orange, Box		
Type	SL 3.50/15/90F 3.2SN OR ...	Version	Product data	Packaging
Order No.	1607170000	PCB plug-in connector, male header, Flange, THT solder connection,	IEC: / 17 A	Box
GTIN (EAN)	4008190022563	3.50 mm, Number of poles: 15, 90°, Solder pin length (l): 3.2 mm,	UL: 300 V / 10 A	
Qty.	50 pc(s).	tinned, orange, Box		

SL-SMT 3.5/180LF Box

High-temperature-resistant male header, 3.50 mm pitch.

- **Plugging direction parallel (90°), straight 180° or angled (135°) to PCB**
- **Housing variants: closed side (G), screw flange (F), solder flange (LF) or snap-on solder flange (RF)**
- **Optimised for the SMT process**
- **Pin length 3.2 mm universal for all soldering methods**
- **Pin length 1.5 mm optimised for reflow soldering methods**
- **Packed either in a box (BX) or tape-on-reel (RL)**
- **Male header can be coded**

General ordering data

Type	SL-SMT 3.50/15/180LF 1. ...	Version	Product data	Packaging
Order No.	1804830000	PCB plug-in connector, male header, Solder flange, THT/THR solder	IEC: 320 V / 15 A	Box
GTIN (EAN)	4032248268603	connection, 3.50 mm, Number of poles: 15, 180°, Solder pin length	UL: 300 V / 10 A	
Qty.	50 pc(s).	(l): 1.5 mm, tinned, black, Box		
Type	SL-SMT 3.50/15/180LF 3. ...	Version	Product data	Packaging
Order No.	1842670000	PCB plug-in connector, male header, Solder flange, THT/THR solder	IEC: 320 V / 15 A	Box
GTIN (EAN)	4032248354030	connection, 3.50 mm, Number of poles: 15, 180°, Solder pin length	UL: 300 V / 10 A	
Qty.	30 pc(s).	(l): 3.2 mm, tinned, black, Box		

OMNIMATE Signal - series BL/SL 3.50
BL 3.50/15/270F SN OR BX

Weidmüller Interface GmbH & Co. KG
Klingenbergstraße 26
D-32758 Detmold
Germany
Fon: +49 5231 14-0
Fax: +49 5231 14-292083
www.weidmueller.com

Accessories

Coding elements

Only connects what is supposed to be connected: the right connection at the right place.
Coding elements and locking devices clearly assign connecting elements during the manufacturing process and operation
The coding elements and locking devices are inserted prior to assembly or during the cable assembly phase.
The Weidmüller alternative: configure online using the variant configurator to precode prior to delivery.
Incorrect assembly on the circuit board and incorrect plugging of connecting elements is no longer possible.
The advantage: no troubleshooting during manufacture and no operational errors by the user.

General ordering data

Type	BL SL 3.5 KO SW	Version	Product data	Packaging
Order No.	1610100000	PCB plug-in connector, Accessories, Coding element, black, Number		Box
GTIN (EAN)	4008190187637	of poles: 1		
Qty.	100 pc(s).			
Type	BL SL 3.5 KO OR	Version	Product data	Packaging
Order No.	1693430000	PCB plug-in connector, Accessories, Coding element, orange, Number		Box
GTIN (EAN)	4008190867447	of poles: 1		
Qty.	100 pc(s).			

WEITERGABE SOWIE VERVIELFAELTIGUNG DIESES DOKUMENTS, VERWERTUNG UND MITTEILUNG SEINES INHALTS SIND VERBOTEN, SOWEIT NICHT AUSDRUECKLICH GESTATTET.
ZUWIDERHANDLUNGEN VERPFLICHTEN ZU SCHADENERSATZ. ALLE RECHTE FUER DEN FALL DER PATENT-, GEBRAUCHSMUSTER- ODER GESCHMACKSMUSTEREINTRAGUNG VORBEHALTEN.
THE REPRODUCTION, DISTRIBUTION AND UTILIZATION OF THIS DOCUMENT AS WELL AS THE COMMUNICATION OF ITS CONTENTS TO OTHERS WITHOUT EXPLICID AUTHORIZATION IS PROHIBITED.
OFFENDERS WILL BE HELD LIABLE FOR THE PAYMENT OF DAMAGES. WEIDMUELLER EXCLUSIVELY RESERVES THE RIGHT TO FILE FOR PATENTS, UTILITY MODELS OR DESIGNS.
© WEIDMUELLER INTERFACE GmbH & Co.KG

DIE DEUTSCHE VERSION IST VERBINDLICH
THE GERMAN VERSION IS BINDING

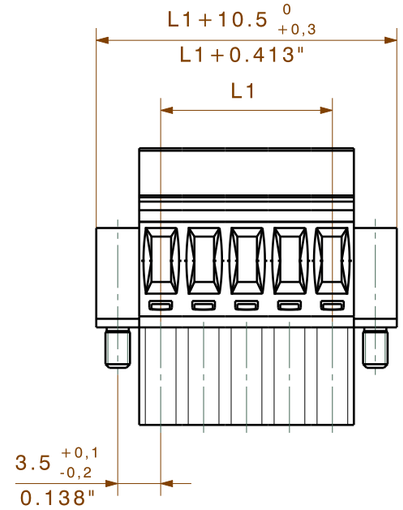

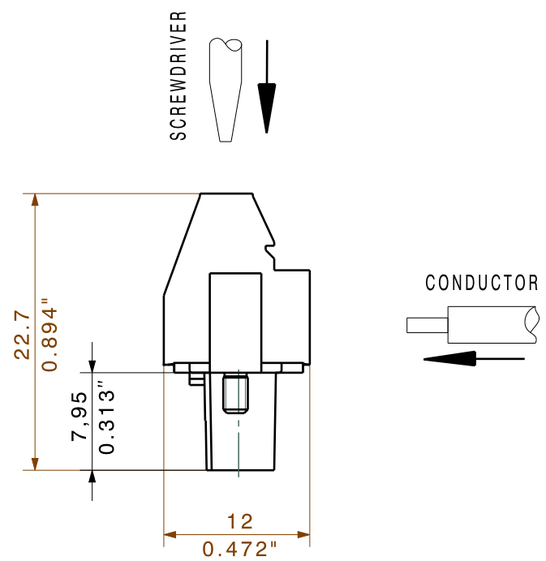

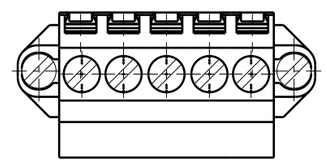

n	L1 [mm]	L1 [Inch]
24	80,50	3,169
23	77,00	3,031
22	73,50	2,894
21	70,00	2,756
20	66,50	2,618
19	63,00	2,480
18	59,50	2,343
17	56,00	2,205
16	52,50	2,067
15	49,00	1,929
14	45,50	1,791
13	42,00	1,654
12	38,50	1,516
11	35,00	1,378
10	31,50	1,240
9	28,00	1,102
8	24,50	0,965
7	21,00	0,827
6	17,50	0,689
5	14,00	0,551
4	10,50	0,413
3	7,00	0,276
2	3,50	0,138

SHOWN:BL3.50/05/270F

For the mounting of PCBs, it should be noted that the rated data stated here relates only to the PCB components alone.
The neccessary creepage and clearance paths must be observed in connection with the respective applicant in accordance to IEC 664 / VDE 0110.
The current-carrying capacity and pitch tolerance is to be determined according to DIN IEC 326 part 3 very fine.

Weidmüller PCB components are tested to the DIN EN 61984 standard, and are valid for its field of application.
Provided that the components are used to the intended purpose, all requirements with respect to the occuring of electrical, mechanical, thermic and corrosive stress will be satisfied.

RoHS COMPLIANT

DIN ISO 2768-m

74368/5
15.04.14 HELIS_MA 01
MODIFICATION

	DATE	NAME
DRAWN	24.07.2003	KOWOLLIK_R
RESPONSIBLE		LANG_T
CHECKED	15.04.2014	THELEN_E
APPROVED		HECKERT_M

SCALE: 5/1
SUPERSEDES: .

Weidmüller

CAT.NO.: .

C 21347 09
DRAWING NO. ISSUE NO.
SHEET 02 OF 02 SHEETS

BL 3.50/.../270...
BUCHSENLEISTE
SOCKET BLOCK

PRODUCT FILE: BL 3.50 90/270 7368