OMNIMATE Signal - series BL/SL 5.08
BLL 5.08/05/90 3.2 SN OR BX

Weidmüller Interface GmbH & Co. KG
Klingenbergstraße 26
D-32758 Detmold
Germany
Fon: +49 5231 14-0
Fax: +49 5231 14-292083
www.weidmueller.com

Product image

Similar to illustration

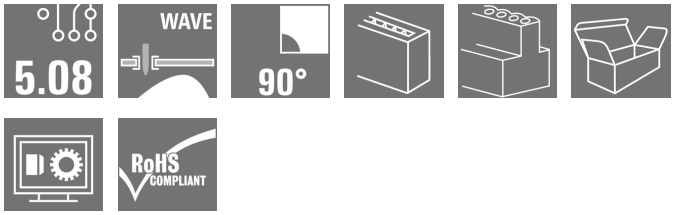

Female header for PCB mounting. The solder pin length is optimised for wave flow soldering.

General ordering data

Type	BLL 5.08/05/90 3.2 SN OR BX
Order No.	1622970000
Version	PCB plug-in connector, female header, closed side, THT solder connection, 5.08 mm, Number of poles: 5, 90°, Solder pin length (l): 3.2 mm, tinned, orange, Box
GTIN (EAN)	4008190194017
Qty.	72 pc(s).
Product data	IEC: 400 V / 23 A UL: 300 V / 15 A
Packaging	Box

Creation date May 3, 2020 8:35:56 PM CEST

OMNIMATE Signal - series BL/SL 5.08
BLL 5.08/05/90 3.2 SN OR BX

Weidmüller Interface GmbH & Co. KG
Klingenbergstraße 26
D-32758 Detmold
Germany
Fon: +49 5231 14-0
Fax: +49 5231 14-292083
www.weidmueller.com

Technical data

Dimensions and weights

Net weight	4.84 g

System specifications

Product family	OMNIMATE Signal - series BL/SL 5.08	Type of connection	Board connection
Mounting onto the PCB	THT solder connection	Pitch in mm (P)	5.08 mm
Pitch in inches (P)	0.2 inch	Outgoing elbow	90°
Number of poles	5	Number of solder pins per pole	2
Solder pin length (l)	3.2 mm	Solder pin length tolerance	+0.1 / -0.3 mm
Tolerance of solder pin position	± 0.1 mm	Solder pin dimensions	0.4 x 1.00 mm
Solder eyelet hole diameter (D)	1.3 mm	Solder eyelet hole diameter tolerance (D)	+ 0,1 mm
L1 in mm	20.32 mm	L1 in inches	0.8 inch
Number of rows	1	Pin series quantity	1
Touch-safe protection acc. to DIN VDE 57 106	Safe from finger touch	Volume resistance	≤ 5mΩ
Can be coded	Yes	Plugging cycles	25
Plugging force/pole, max.	5 N	Pulling force/pole, max.	5 N

Material data

Insulating material	PBT GF	Colour	orange
Colour chart (similar)	RAL 2000	Insulating material group	IIIa
Comparative Tracking Index (CTI)	≥ 200	Insulation strength	≥ 10^8 Ω
UL 94 flammability rating	V-0	GWFI	960 °C
Contact material	Copper alloy	Contact surface	tinned
Layer structure of solder connection	4-6 µm Sn hot-dip tinned	Layer structure of plug contact	4-6 µm Sn hot-dip tinned
Storage temperature, min.	-25 °C	Storage temperature, max.	50 °C
Max. relative humidity during storage	70 %	Operating temperature, min.	-50 °C
Operating temperature, max.	100 °C	Temperature range, installation, min.	-25 °C
Temperature range, installation, max.	100 °C		

Rated data acc. to IEC

tested acc. to standard	IEC 60664-1, IEC 61984	Rated current, min. number of poles (Tu=20°C)	23 A
Rated current, max. number of poles (Tu=20°C)	16 A	Rated current, min. number of poles (Tu=40°C)	20 A
Rated current, max. number of poles (Tu=40°C)	14 A	Rated voltage for surge voltage class / pollution degree II/2	400 V
Rated voltage for surge voltage class / pollution degree III/2	320 V	Rated voltage for surge voltage class / pollution degree III/3	250 V
Rated impulse voltage for surge voltage class/ pollution degree II/2	4 kV	Rated impulse voltage for surge voltage class/ pollution degree III/2	4 kV
Rated impulse voltage for surge voltage class/ contamination degree III/3	4 kV	Short-time withstand current resistance	3 x 1s with 120 A

OMNIMATE Signal - series BL/SL 5.08
BLL 5.08/05/90 3.2 SN OR BX

Weidmüller Interface GmbH & Co. KG
Klingenbergstraße 26
D-32758 Detmold
Germany
Fon: +49 5231 14-0
Fax: +49 5231 14-292083
www.weidmueller.com

Technical data

Rated data acc. to CSA

Institute (CSA)		Certificate No. (CSA)	
			200039-1121690
Rated voltage (Use group B / CSA)	300 V	Rated voltage (Use group D / CSA)	300 V
Rated current (Use group B / CSA)	15 A	Rated current (Use group D / CSA)	10 A
Reference to approval values	Specifications are maximum values, details - see approval certificate.		

Rated data acc. to UL 1059

Institute (UR)		Certificate No. (UR)	
			E60693
Rated voltage (Use group B / UL 1059)	300 V	Rated voltage (Use group D / UL 1059)	300 V
Rated current (Use group B / UL 1059)	15 A	Rated current (Use group D / UL 1059)	10 A
Reference to approval values	Specifications are maximum values, details - see approval certificate.		

Packing

Packaging	Box	VPE length	30 mm
VPE width	175 mm	VPE height	350 mm

Classifications

ETIM 6.0	EC002637	ETIM 7.0	EC002637
eClass 9.0	27-44-04-02	eClass 9.1	27-44-04-02
eClass 10.0	27-44-04-02	UNSPSC	30-21-18-10

Notes

Notes	• Additional colours on request • Gold-plated contact surfaces on request • Rated current related to rated cross-section & min. No. of poles. • P on drawing = pitch • Rated data refer only to the component itself. Clearance and creepage distances to other components are to be designed in accordance with the relevant application standards.
IPC conformity	Conformity: The products are developed, manufactured and delivered according international recognized standards and norms and comply with the assured properties in the data sheet resp. fulfill decorative properties in accordance with IPC-A-610 "Class 2". Further claims on the products can be evaluated on request.

OMNIMATE Signal - series BL/SL 5.08
BLL 5.08/05/90 3.2 SN OR BX

Weidmüller Interface GmbH & Co. KG
Klingenbergstraße 26
D-32758 Detmold
Germany
Fon: +49 5231 14-0
Fax: +49 5231 14-292083
www.weidmueller.com

Technical data

Approvals

Approvals	
ROHS	Conform

Downloads

Approval/Certificate/Document of Conformity	Declaration of the Manufacturer
Brochure/Catalogue	FL DRIVES EN MB DEVICE MANUF. EN FL DRIVES DE CAT 2 PORTFOLIOGUIDE EN FL BUILDING SAFETY EN FL APPL LED LIGHTING EN FL INDUSTR.CONTROLS EN FL MACHINE SAFETY EN FL HEATING ELECTR EN FL APPL_INVERTER EN FL_BASE_STATION_EN FL ELEVATOR EN FL POWER SUPPLY EN FL 72H SAMPLE SER EN PO OMNIMATE EN
Engineering Data	EPLAN, WSCAD
Engineering Data	BLL.zip

OMNIMATE Signal - series BL/SL 5.08
BLL 5.08/05/90 3.2 SN OR BX

Weidmüller Interface GmbH & Co. KG
Klingenbergstraße 26
D-32758 Detmold
Germany
Fon: +49 5231 14-0
Fax: +49 5231 14-292083
www.weidmueller.com

Drawings

Dimensional drawing

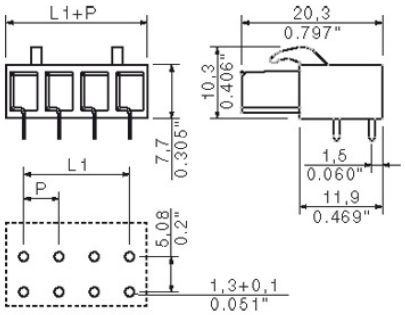

OMNIMATE Signal - series BL/SL 5.08
BLL 5.08/05/90 3.2 SN OR BX

Weidmüller Interface GmbH & Co. KG
Klingenbergstraße 26
D-32758 Detmold
Germany
Fon: +49 5231 14-0
Fax: +49 5231 14-292083
www.weidmueller.com

Mating connector (fully pluggable)

SL 5.08HC/90B

Pin headers made from glass-fibre-reinforced plastic with 90° wire outlet; optimised for wave soldering. The flange variant (F) can be screwed onto the respective counter piece or the circuit board. There is no need for an extra screw to connect the circuit board when the solder flange (LF) version is used. This also protects the solder points from mechanical strain. All pin headers can be manually coded or ordered pre-coded. HC = High Current.

General ordering data

Type	SL 5.08HC/05/90B 3.2SN ...	Version	Product data	Packaging
Order No.	1148130000	PCB plug-in connector, male header, Dovetails for fixing blocks, THT solder connection, 5.08 mm, Number of poles: 5, 90°, Solder pin length (l): 3.2 mm, tinned, orange, Box	IEC: 400 V / 24 A UL: 300 V / 18.5 A	Box
GTIN (EAN)	4050118051018			
Qty.	50 pc(s).			
Type	SL 5.08HC/05/90B 3.2SN ...	Version	Product data	Packaging
Order No.	1155610000	PCB plug-in connector, male header, Dovetails for fixing blocks, THT solder connection, 5.08 mm, Number of poles: 5, 90°, Solder pin length (l): 3.2 mm, tinned, black, Box	IEC: 400 V / 24 A UL: 300 V / 18.5 A	Box
GTIN (EAN)	4050118050325			
Qty.	50 pc(s).			

SLF 5.08/180DF SN

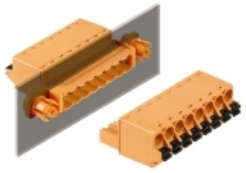

Male plug with PUSH IN wire connection and straight outlet direction, when used with BLF 5.08HC as wire-to-wire application for panel feed-through The male plugs provide space for labelling and can be coded.

General ordering data

Type	SLF 5.08/05/180DF SN OR ...	Version	Product data	Packaging
Order No.	1353620000	PCB plug-in connector, male plug, 5.08 mm, Number of poles: 5, 180°, PUSH IN, Spring connection, Clamping range, max. : 3.31 mm², Box	IEC: 400 V / 25.9 A / 0.2 - 2.5 mm² UL: 300 V / 14 A / AWG 26 - AWG 12	Box
GTIN (EAN)	4050118156416			
Qty.	36 pc(s).			

OMNIMATE Signal - series BL/SL 5.08
BLL 5.08/05/90 3.2 SN OR BX

Weidmüller Interface GmbH & Co. KG
Klingenbergstraße 26
D-32758 Detmold
Germany
Fon: +49 5231 14-0
Fax: +49 5231 14-292083
www.weidmueller.com

Mating connector (fully pluggable)

SLT 5.08B

Male plugs with screw TOP wire connection. The male plug provides space for labelling and can be coded.

General ordering data

Type	SLT 5.08/05/180B SN OR ...	Version	Product data	Packaging
Order No.	1611740000	PCB plug-in connector, male plug, 5.08 mm, Number of poles: 5, 180°, TOP connection, Clamping range, max. : 2.5 mm², Box	IEC: 400 V / 16 A / 0.2 - 2.5 mm²	Box
GTIN (EAN)	4008190192624		UL: 300 V / 15 A / AWG 26 - AWG 14	
Qty.	50 pc(s).			

SLDV 5.08/90B

Pin headers with solder pin length optimised for wave flow soldering. The male connectors provide space for labelling and can be coded. HC = High Current.

General ordering data

Type	SLD 5.08V/10/90B 3.2 SN ...	Version	Product data	Packaging
Order No.	1726310000	PCB plug-in connector, male header, Dovetails for fixing blocks, THT solder connection, 5.08 mm, Number of poles: 10, 90°, Solder pin length (l): 3.2 mm, tinned, orange, Box	IEC: 400 V / 17 A	Box
GTIN (EAN)	4032248061280		UL: 300 V / 10 A	
Qty.	50 pc(s).			

OMNIMATE Signal - series BL/SL 5.08
BLL 5.08/05/90 3.2 SN OR BX

Weidmüller Interface GmbH & Co. KG
Klingenbergstraße 26
D-32758 Detmold
Germany
Fon: +49 5231 14-0
Fax: +49 5231 14-292083
www.weidmueller.com

Mating connector (fully pluggable)

SL 5.08/90B

Male connectors with 90° outlet direction. The solder pin length is optimised for wave flow soldering. The pin headers provide space for labelling and can be coded.

General ordering data

Type	SL 5.08/05/90B 3.2SN OR ...	Version	Product data	Packaging
Order No.	1510660000	PCB plug-in connector, male header, Dovetails for fixing blocks, THT solder connection, 5.08 mm, Number of poles: 5, 90°, Solder pin length (l): 3.2 mm, tinned, orange, Box	IEC: 400 V / 18 A UL: 300 V / 15 A	Box
GTIN (EAN)	4008190121372			
Qty.	50 pc(s).			
Type	SL 5.08/05/90B 3.2SN BK ...	Version	Product data	Packaging
Order No.	1510610000	PCB plug-in connector, male header, Dovetails for fixing blocks, THT solder connection, 5.08 mm, Number of poles: 5, 90°, Solder pin length (l): 3.2 mm, tinned, black, Box	IEC: 400 V / 18 A UL: 300 V / 15 A	Box
GTIN (EAN)	4008190204051			
Qty.	50 pc(s).			

SL 5.08/135

Male connectors with 135° outlet direction. The solder pin length is optimised for wave flow soldering. The pin headers provide space for labelling and can be coded.

General ordering data

Type	SL 5.08/05/135 3.2SN OR ...	Version	Product data	Packaging
Order No.	1603090000	PCB plug-in connector, male header, open side, THT solder connection, 5.08 mm, Number of poles: 5, 135°, Solder pin length (l): 3.2 mm, tinned, orange, Box	IEC: 400 V / 17 A UL: 300 V / 15 A	Box
GTIN (EAN)	4008190013912			
Qty.	50 pc(s).			

OMNIMATE Signal - series BL/SL 5.08
BLL 5.08/05/90 3.2 SN OR BX

Weidmüller Interface GmbH & Co. KG
Klingenbergstraße 26
D-32758 Detmold
Germany
Fon: +49 5231 14-0
Fax: +49 5231 14-292083
www.weidmueller.com

Mating connector (fully pluggable)

SL-SMT 5.08/270GL Tape

High-temperature-resistant, straight, open pin header. Packed in box or tape. On tape and with 1.5 mm solder pin, optimised for automatic assembly. 3.2 mm solder pin suitable for reflow and wave soldering. The pin headers provide space for labelling and can be coded. HC = High Current.

General ordering data

Type	SL-SMT 5.08HC/05/270GL ...	Version	Product data	Packaging
Order No.	1877770000	PCB plug-in connector, male header, closed side, THT/THR solder	IEC: 400 V / 27.5 A	Tape
GTIN (EAN)	4032248468423	connection, 5.08 mm, Number of poles: 5, 270°, Solder pin length (l):	UL: 300 V / 18.5 A	
Qty.	350 pc(s).	1.5 mm, tinned, black, Tape		
Type	SL-SMT 5.08/05/270GL 3. ...	Version	Product data	Packaging
Order No.	1877910000	PCB plug-in connector, male header, closed side, THT/THR solder	IEC: 400 V / 27.5 A	Tape
GTIN (EAN)	4032248468584	connection, 5.08 mm, Number of poles: 5, 270°, Solder pin length (l):	UL: 300 V / 18.5 A	
Qty.	350 pc(s).	3.2 mm, tinned, black, Tape		

SLDV 5.08/90

Pin headers with solder pin length optimised for wave flow soldering. The male connectors provide space for labelling and can be coded. HC = High Current.

General ordering data

Type	SLD 5.08V/10/90 3.2 SN ...	Version	Product data	Packaging
Order No.	1725200000	PCB plug-in connector, male header, open side, THT solder	IEC: 400 V / 17 A	Box
GTIN (EAN)	4032248060603	connection, 5.08 mm, Number of poles: 10, 90°, Solder pin length (l):	UL: 300 V / 10 A	
Qty.	50 pc(s).	3.2 mm, tinned, orange, Box		

OMNIMATE Signal - series BL/SL 5.08
BLL 5.08/05/90 3.2 SN OR BX

Weidmüller Interface GmbH & Co. KG
Klingenbergstraße 26
D-32758 Detmold
Germany
Fon: +49 5231 14-0
Fax: +49 5231 14-292083
www.weidmueller.com

Mating connector (fully pluggable)

SL 5.08HC/180B

Pin headers in glass-fibre-reinforced plastic with straight wire outlet; optimised for wave soldering. The flange variant (F) can be screwed onto the respective counter piece or the circuit board. There is no need for an extra screw to connect the circuit board when the solder flange (LF) version is used. This also protects the solder points from mechanical strain. All pin headers can be manually coded or ordered pre-coded. HC = High Current.

General ordering data

Type	SL 5.08HC/05/180B 3.2SN ...	Version	Product data	Packaging
Order No.	1147390000	PCB plug-in connector, male header, Dovetails for fixing blocks, THT solder connection, 5.08 mm, Number of poles: 5, 180°, Solder pin length (l): 3.2 mm, tinned, orange, Box	IEC: 400 V / 24 A UL: 300 V / 18.5 A	Box
GTIN (EAN)	4032248932740			
Qty.	50 pc(s).			
Type	SL 5.08HC/05/180B 3.2SN ...	Version	Product data	Packaging
Order No.	1149500000	PCB plug-in connector, male header, Dovetails for fixing blocks, THT solder connection, 5.08 mm, Number of poles: 5, 180°, Solder pin length (l): 3.2 mm, tinned, black, Box	IEC: 400 V / 24 A UL: 300 V / 18.5 A	Box
GTIN (EAN)	4032248934706			
Qty.	50 pc(s).			

SL-SMT 5.08/180G Box

High-temperature-resistant pin header, packed in box or tape. On tape, with 1.5 mm solder pin, optimised for automatic assembly. 3.2 mm solder pin suitable for reflow and wave soldering. The pin headers provide space for labelling and can be coded. HC = High Current.

General ordering data

Type	SL-SMT 5.08HC/05/180G 1 ...	Version	Product data	Packaging
Order No.	1775952001	PCB plug-in connector, male header, closed side, THT/THR solder connection, 5.08 mm, Number of poles: 5, 180°, Solder pin length (l): 1.5 mm, tinned, black, Box	IEC: 400 V / 27.5 A UL: 300 V / 18.5 A	Box
GTIN (EAN)	4032248158942			
Qty.	50 pc(s).			
Type	SL-SMT 5.08HC/05/180G 3 ...	Version	Product data	Packaging
Order No.	1838240000	PCB plug-in connector, male header, closed side, THT/THR solder connection, 5.08 mm, Number of poles: 5, 180°, Solder pin length (l): 3.2 mm, tinned, black, Box	IEC: 400 V / 27.5 A UL: 300 V / 18.5 A	Box
GTIN (EAN)	4032248348305			
Qty.	50 pc(s).			

OMNIMATE Signal - series BL/SL 5.08
BLL 5.08/05/90 3.2 SN OR BX

Weidmüller Interface GmbH & Co. KG
Klingenbergstraße 26
D-32758 Detmold
Germany
Fon: +49 5231 14-0
Fax: +49 5231 14-292083
www.weidmueller.com

Mating connector (fully pluggable)

SL-SMT 5.08HC/90 Tape

High-temperature-resistant, 90° angled, open male header. Packed in box or tape. On tape, with 1.5 mm solder pin, optimised for automatic assembly. 3.2 mm solder pin suitable for reflow and wave soldering. The pin headers provide space for labelling and can be coded. HC = High Current.

General ordering data

Type	SL-SMT 5.08HC/05/90 1.5 ...	Version	Product data	Packaging
Order No.	1774794001	PCB plug-in connector, male header, open side, THT/THR solder	IEC: 400 V / 27.5 A	Tape
GTIN (EAN)	4032248167685	connection, 5.08 mm, Number of poles: 5, 90°, Solder pin length (l):	UL: 300 V / 18.5 A	
Qty.	350 pc(s).	1.5 mm, tinned, black, Tape		

SL-SMT 5.08/180 Box

High-temperature-resistant, straight, open pin header. Packed in box or tape. On tape and with 1.5 mm solder pin, optimised for automatic assembly. 3.2 mm solder pin suitable for reflow and wave soldering. The pin headers provide space for labelling and can be coded. HC = High Current.

General ordering data

Type	SL-SMT 5.08HC/05/180 3. ...	Version	Product data	Packaging
Order No.	1838010000	PCB plug-in connector, male header, open side, THT/THR solder	IEC: 400 V / 27.5 A	Box
GTIN (EAN)	4032248348077	connection, 5.08 mm, Number of poles: 5, 180°, Solder pin length (l):	UL: 300 V / 18.5 A	
Qty.	50 pc(s).	3.2 mm, tinned, black, Box		
Type	SL-SMT 5.08HC/05/180 1. ...	Version	Product data	Packaging
Order No.	1775632001	PCB plug-in connector, male header, open side, THT/THR solder	IEC: 400 V / 27.5 A	Box
GTIN (EAN)	4032248157570	connection, 5.08 mm, Number of poles: 5, 180°, Solder pin length (l):	UL: 300 V / 18.5 A	
Qty.	50 pc(s).	1.5 mm, tinned, black, Box		

OMNIMATE Signal - series BL/SL 5.08
BLL 5.08/05/90 3.2 SN OR BX

Weidmüller Interface GmbH & Co. KG
Klingenbergstraße 26
D-32758 Detmold
Germany
Fon: +49 5231 14-0
Fax: +49 5231 14-292083
www.weidmueller.com

Mating connector (fully pluggable)

SLDV 5.08/180

Pin headers with solder pin length optimised for wave flow soldering. The male connectors provide space for labelling and can be coded. HC = High Current.

General ordering data

Type	SLD 5.08V/10/180 3.2SN ...	Version	Product data	Packaging
Order No.	1725680000	PCB plug-in connector, male header, open side, THT solder connection, 5.08 mm, Number of poles: 10, 180°, Solder pin length (l): 3.2 mm, tinned, orange, Box	IEC: 400 V / 14 A UL: 300 V / 10 A	Box
GTIN (EAN)	4032248061976			
Qty.	50 pc(s).			

SL-SMT 5.08/180 Tape

High-temperature-resistant, straight, open pin header. Packed in box or tape. On tape and with 1.5 mm solder pin, optimised for automatic assembly. 3.2 mm solder pin suitable for reflow and wave soldering. The pin headers provide space for labelling and can be coded. HC = High Current.

General ordering data

Type	SL-SMT 5.08HC/05/180 1. ...	Version	Product data	Packaging
Order No.	1775634001	PCB plug-in connector, male header, open side, THT/THR solder connection, 5.08 mm, Number of poles: 5, 180°, Solder pin length (l): 1.5 mm, tinned, black, Tape	IEC: 400 V / 27.5 A UL: 300 V / 18.5 A	Tape
GTIN (EAN)	4032248159611			
Qty.	250 pc(s).			

OMNIMATE Signal - series BL/SL 5.08
BLL 5.08/05/90 3.2 SN OR BX

Weidmüller Interface GmbH & Co. KG
Klingenbergstraße 26
D-32758 Detmold
Germany
Fon: +49 5231 14-0
Fax: +49 5231 14-292083
www.weidmueller.com

Mating connector (fully pluggable)

SLT 5.08/180DF SN

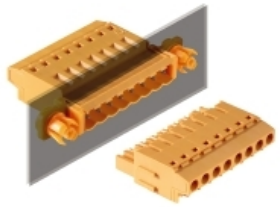

Male plugs with screw TOP wire connection. The male plug provides space for labelling and can be coded.

General ordering data

Type	SLT 5.08/05/180DF SN OR ...	Version	Product data	Packaging
Order No.	1353390000	PCB plug-in connector, male plug, 5.08 mm, Number of poles: 5, 180°, TOP connection, Clamping range, max. : 2.5 mm², Box	IEC: 400 V / 16 A / 0.2 - 2.5 mm²	Box
GTIN (EAN)	4050118156126		UL: 300 V / 15 A / AWG 26 - AWG 14	
Qty.	36 pc(s).			

SL-SMT 5.08HC/90 Box

High-temperature-resistant, 90° angled, open male header. Packed in box or tape. On tape, with 1.5 mm solder pin, optimised for automatic assembly. 3.2 mm solder pin suitable for reflow and wave soldering. The pin headers provide space for labelling and can be coded. HC = High Current.

General ordering data

Type	SL-SMT 5.08HC/05/90 1.5 ...	Version	Product data	Packaging
Order No.	1774792001	PCB plug-in connector, male header, open side, THT/THR solder connection, 5.08 mm, Number of poles: 5, 90°, Solder pin length (l): 1.5 mm, tinned, black, Box	IEC: 400 V / 27.5 A	Box
GTIN (EAN)	4032248155828		UL: 300 V / 18.5 A	
Qty.	50 pc(s).			
Type	SL-SMT 5.08HC/05/90 3.2 ...	Version	Product data	Packaging
Order No.	1779980000	PCB plug-in connector, male header, open side, THT/THR solder connection, 5.08 mm, Number of poles: 5, 90°, Solder pin length (l): 3.2 mm, tinned, black, Box	IEC: 400 V / 27.5 A	Box
GTIN (EAN)	4032248165308		UL: 300 V / 18.5 A	
Qty.	50 pc(s).			

OMNIMATE Signal - series BL/SL 5.08
BLL 5.08/05/90 3.2 SN OR BX

Weidmüller Interface GmbH & Co. KG
Klingenbergstraße 26
D-32758 Detmold
Germany
Fon: +49 5231 14-0
Fax: +49 5231 14-292083
www.weidmueller.com

Mating connector (fully pluggable)

SL 5.08/180B

Male connectors with straight outlet direction. The solder pin length is optimised for wave flow soldering. The pin headers provide space for labelling and can be coded.

General ordering data

Type	SL 5.08/05/180B 3.2SN O ...	Version	Product data	Packaging
Order No.	1519860000	PCB plug-in connector, male header, Dovetails for fixing blocks, THT solder connection, 5.08 mm, Number of poles: 5, 180°, Solder pin length (l): 3.2 mm, tinned, orange, Box	IEC: 400 V / 18 A UL: 300 V / 15 A	Box
GTIN (EAN)	4008190014094			
Qty.	50 pc(s).			

SL-SMT 5.08/180G Tape

High-temperature-resistant pin header, packed in box or tape. On tape, with 1.5 mm solder pin, optimised for automatic assembly. 3.2 mm solder pin suitable for reflow and wave soldering. The pin headers provide space for labelling and can be coded. HC = High Current.

General ordering data

Type	SL-SMT 5.08HC/05/180G 1 ...	Version	Product data	Packaging
Order No.	1775954001	PCB plug-in connector, male header, closed side, THT/THR solder connection, 5.08 mm, Number of poles: 5, 180°, Solder pin length (l): 1.5 mm, tinned, black, Tape	IEC: 400 V / 27.5 A UL: 300 V / 18.5 A	Tape
GTIN (EAN)	4032248160143			
Qty.	250 pc(s).			

OMNIMATE Signal - series BL/SL 5.08
BLL 5.08/05/90 3.2 SN OR BX

Weidmüller Interface GmbH & Co. KG
Klingenbergstraße 26
D-32758 Detmold
Germany
Fon: +49 5231 14-0
Fax: +49 5231 14-292083
www.weidmueller.com

Mating connector (fully pluggable)

SLF 5.08/180 SN

Male plug with PUSH IN wire connection and straight outlet direction, when used with BLF 5.08HC as wire-to-wire application for panel feed-through The male plugs provide space for labelling and can be coded.

General ordering data

Type	SLF 5.08/05/180 SN BK BX	Version	Product data	Packaging
Order No.	1335610000	PCB plug-in connector, male plug, 5.08 mm, Number of poles: 5,	IEC: 400 V / 25.9 A / 0.2 - 2.5 mm²	Box
GTIN (EAN)	4050118140149	180°, PUSH IN, Spring connection, Clamping range, max. : 3.31 mm²,	UL: 300 V / 14 A / AWG 26 - AWG 12	
Qty.	72 pc(s).	Box		
Type	SLF 5.08/05/180 SN OR BX	Version	Product data	Packaging
Order No.	1335360000	PCB plug-in connector, male plug, 5.08 mm, Number of poles: 5,	IEC: 400 V / 25.9 A / 0.2 - 2.5 mm²	Box
GTIN (EAN)	4050118140576	180°, PUSH IN, Spring connection, Clamping range, max. : 3.31 mm²,	UL: 300 V / 14 A / AWG 26 - AWG 12	
Qty.	72 pc(s).	Box		

SL-SMT 5.08HC/90G Box

High-temperature-resistant pin header, packed in box or tape. On tape, with 1.5 mm solder pin, optimised for automatic assembly. 3.2 mm solder pin suitable for reflow and wave soldering. The pin headers provide space for labelling and can be coded. HC = High Current.

General ordering data

Type	SL-SMT 5.08HC/05/90G 3. ...	Version	Product data	Packaging
Order No.	1780210000	PCB plug-in connector, male header, closed side, THT/THR solder	IEC: 400 V / 27.5 A	Box
GTIN (EAN)	4032248165537	connection, 5.08 mm, Number of poles: 5, 90°, Solder pin length (l):	UL: 300 V / 18.5 A	
Qty.	50 pc(s).	3.2 mm, tinned, black, Box		
Type	SL-SMT 5.08HC/05/90G 1. ...	Version	Product data	Packaging
Order No.	1775032001	PCB plug-in connector, male header, closed side, THT/THR solder	IEC: 400 V / 27.5 A	Box
GTIN (EAN)	4032248156092	connection, 5.08 mm, Number of poles: 5, 90°, Solder pin length (l):	UL: 300 V / 18.5 A	
Qty.	50 pc(s).	1.5 mm, tinned, black, Box		

OMNIMATE Signal - series BL/SL 5.08
BLL 5.08/05/90 3.2 SN OR BX

Weidmüller Interface GmbH & Co. KG
Klingenbergstraße 26
D-32758 Detmold
Germany
Fon: +49 5231 14-0
Fax: +49 5231 14-292083
www.weidmueller.com

Mating connector (fully pluggable)

SL 5.08HC/180G

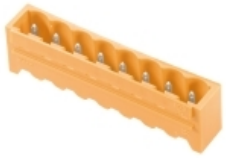

Pin headers in glass-fibre-reinforced plastic with straight wire outlet; optimised for wave soldering. The flange variant (F) can be screwed onto the respective counter piece or the circuit board. There is no need for an extra screw to connect the circuit board when the solder flange (LF) version is used. This also protects the solder points from mechanical strain. All pin headers can be manually coded or ordered pre-coded. HC = High Current.

General ordering data

Type	SL 5.08HC/05/180G 3.2SN ...	Version	Product data	Packaging
Order No.	1148730000	PCB plug-in connector, male header, closed side, THT solder	IEC: 400 V / 24 A	Box
GTIN (EAN)	4032248934850	connection, 5.08 mm, Number of poles: 5, 180°, Solder pin length (l):	UL: 300 V / 18.5 A	
Qty.	50 pc(s).	3.2 mm, tinned, black, Box		
Type	SL 5.08HC/05/180G 3.2SN ...	Version	Product data	Packaging
Order No.	1146800000	PCB plug-in connector, male header, closed side, THT solder	IEC: 400 V / 24 A	Box
GTIN (EAN)	4032248108657	connection, 5.08 mm, Number of poles: 5, 180°, Solder pin length (l):	UL: 300 V / 18.5 A	
Qty.	50 pc(s).	3.2 mm, tinned, orange, Box		

SLF 5.08/180B SN

Male plug with PUSH IN wire connection and straight outlet direction, when used with BLF 5.08HC as wire-to-wire application for panel feed-through The male plugs provide space for labelling and can be coded.

General ordering data

Type	SLF 5.08/05/180B SN BK ...	Version	Product data	Packaging
Order No.	1335830000	PCB plug-in connector, male plug, 5.08 mm, Number of poles: 5,	IEC: 400 V / 25.9 A / 0.2 - 2.5 mm²	Box
GTIN (EAN)	4050118138870	180°, PUSH IN, Spring connection, Clamping range, max. : 3.31 mm²,	UL: 300 V / 14 A / AWG 26 - AWG 12	
Qty.	66 pc(s).	Box		
Type	SLF 5.08/05/180B SN OR ...	Version	Product data	Packaging
Order No.	1335470000	PCB plug-in connector, male plug, 5.08 mm, Number of poles: 5,	IEC: 400 V / 25.9 A / 0.2 - 2.5 mm²	Box
GTIN (EAN)	4050118138931	180°, PUSH IN, Spring connection, Clamping range, max. : 3.31 mm²,	UL: 300 V / 14 A / AWG 26 - AWG 12	
Qty.	66 pc(s).	Box		

OMNIMATE Signal - series BL/SL 5.08
BLL 5.08/05/90 3.2 SN OR BX

Weidmüller Interface GmbH & Co. KG
Klingenbergstraße 26
D-32758 Detmold
Germany
Fon: +49 5231 14-0
Fax: +49 5231 14-292083
www.weidmueller.com

Mating connector (fully pluggable)

SLS 5.08/180B

Male plugs with clamping-yoke screw wire-connect system. The male plugs provide space for labelling and can be coded.

General ordering data

Type	SLS 5.08/05/180B SN OR ...	Version	Product data	Packaging
Order No.	1627270000	PCB plug-in connector, male plug, 5.08 mm, Number of poles: 5,	IEC: 400 V / 21.5 A / 0.2 - 2.5 mm²	Box
GTIN (EAN)	4008190199784	180°, Clamping yoke connection, Clamping range, max. : 3.31 mm²,	UL: 300 V / 14 A / AWG 26 - AWG 12	
Qty.	66 pc(s).	Box		

SL 5.08HC/180

Pin headers in glass-fibre-reinforced plastic with straight wire outlet; optimised for wave soldering. The flange variant (F) can be screwed onto the respective counter piece or the circuit board. There is no need for an extra screw to connect the circuit board when the solder flange (LF) version is used. This also protects the solder points from mechanical strain. All pin headers can be manually coded or ordered pre-coded. HC = High Current.

General ordering data

Type	SL 5.08HC/05/180 3.2SN ...	Version	Product data	Packaging
Order No.	1146410000	PCB plug-in connector, male header, open side, THT solder	IEC: 400 V / 24 A	Box
GTIN (EAN)	4032248932566	connection, 5.08 mm, Number of poles: 5, 180°, Solder pin length (l):	UL: 300 V / 18.5 A	
Qty.	50 pc(s).	3.2 mm, tinned, orange, Box		
Type	SL 5.08HC/05/180 3.2SN ...	Version	Product data	Packaging
Order No.	1148180000	PCB plug-in connector, male header, open side, THT solder	IEC: 400 V / 24 A	Box
GTIN (EAN)	4032248933587	connection, 5.08 mm, Number of poles: 5, 180°, Solder pin length (l):	UL: 300 V / 18.5 A	
Qty.	50 pc(s).	3.2 mm, tinned, black, Box		

OMNIMATE Signal - series BL/SL 5.08
BLL 5.08/05/90 3.2 SN OR BX

Weidmüller Interface GmbH & Co. KG
Klingenbergstraße 26
D-32758 Detmold
Germany
Fon: +49 5231 14-0
Fax: +49 5231 14-292083
www.weidmueller.com

Mating connector (fully pluggable)

SL-SMT 5.08/270GH Tape

High-temperature-resistant, straight, open pin header. Packed in box or tape. On tape and with 1.5 mm solder pin, optimised for automatic assembly. 3.2 mm solder pin suitable for reflow and wave soldering. The pin headers provide space for labelling and can be coded. HC = High Current.

General ordering data

Type	SL-SMT 5.08HC/05/270GH ...	Version	Product data	Packaging
Order No.	1877620000	PCB plug-in connector, male header, closed side, THT/THR solder	IEC: 400 V / 27.5 A	Tape
GTIN (EAN)	4032248468218	connection, 5.08 mm, Number of poles: 5, 270°, Solder pin length (l):	UL: 300 V / 18.5 A	
Qty.	225 pc(s).	1.5 mm, tinned, black, Tape		
Type	SL-SMT 5.08HC/05/270GH ...	Version	Product data	Packaging
Order No.	1877840000	PCB plug-in connector, male header, closed side, THT/THR solder	IEC: 400 V / 27.5 A	Tape
GTIN (EAN)	4032248468492	connection, 5.08 mm, Number of poles: 5, 270°, Solder pin length (l):	UL: 300 V / 18.5 A	
Qty.	225 pc(s).	3.2 mm, tinned, black, Tape		

SL-SMT 5.08HC/90G Tape

High-temperature-resistant pin header, packed in box or tape. On tape, with 1.5 mm solder pin, optimised for automatic assembly. 3.2 mm solder pin suitable for reflow and wave soldering. The pin headers provide space for labelling and can be coded. HC = High Current.

General ordering data

Type	SL-SMT 5.08HC/05/90G 1. ...	Version	Product data	Packaging
Order No.	1775034001	PCB plug-in connector, male header, closed side, THT/THR solder	IEC: 400 V / 27.5 A	Tape
GTIN (EAN)	4032248167753	connection, 5.08 mm, Number of poles: 5, 90°, Solder pin length (l):	UL: 300 V / 18.5 A	
Qty.	350 pc(s).	1.5 mm, tinned, black, Tape		

OMNIMATE Signal - series BL/SL 5.08
BLL 5.08/05/90 3.2 SN OR BX

Weidmüller Interface GmbH & Co. KG
Klingenbergstraße 26
D-32758 Detmold
Germany
Fon: +49 5231 14-0
Fax: +49 5231 14-292083
www.weidmueller.com

Mating connector (fully pluggable)

SL 5.08/90

Male connectors with 90° outlet direction. The solder pin length is optimised for wave flow soldering. The pin headers provide space for labelling and can be coded.

General ordering data

Type	SL 5.08/05/90 3.2SN OR ...	Version	Product data	Packaging
Order No.	1508360000	PCB plug-in connector, male header, open side, THT solder connection, 5.08 mm, Number of poles: 5, 90°, Solder pin length (l): 3.2 mm, tinned, orange, Box	IEC: 400 V / 18 A UL: 300 V / 15 A	Box
GTIN (EAN)	4008190131241			
Qty.	50 pc(s).			

SLDF 5.08

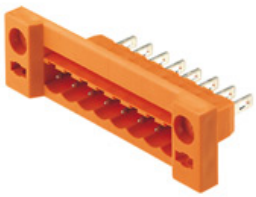

Male connector for through-panel mounting with optional locking function. Internal connection as flat-blade or solder connection. These male connectors provide space for labelling and can be coded.

General ordering data

Type	SLDF 5.08 L/F 5 SN BK BX	Version	Product data	Packaging
Order No.	1635770000	PCB plug-in connector, male header, 5.08 mm, Number of poles: 5, 180°, Flat-blade connection, Solder connection, Box	IEC: 400 V / 15 A UL: 300 V / 10 A	Box
GTIN (EAN)	4008190264208			
Qty.	36 pc(s).			
Type	SLDF 5.08 L/F 5 SN OR BX	Version	Product data	Packaging
Order No.	1599160000	PCB plug-in connector, male header, 5.08 mm, Number of poles: 5, 180°, Flat-blade connection, Solder connection, Box	IEC: 400 V / 15 A UL: 300 V / 10 A	Box
GTIN (EAN)	4008190079970			
Qty.	36 pc(s).			

OMNIMATE Signal - series BL/SL 5.08
BLL 5.08/05/90 3.2 SN OR BX

Weidmüller Interface GmbH & Co. KG
Klingenbergstraße 26
D-32758 Detmold
Germany
Fon: +49 5231 14-0
Fax: +49 5231 14-292083
www.weidmueller.com

Mating connector (fully pluggable)

SLDV 5.08/180B

Pin headers with solder pin length optimised for wave flow soldering. The male connectors provide space for labelling and can be coded. HC = High Current.

General ordering data

Type	SLD 5.08V/10/180B 3.2SN ...	Version	Product data	Packaging
Order No.	1726770000	PCB plug-in connector, male header, Dovetails for fixing blocks, THT	IEC: 400 V / 14 A	Box
GTIN (EAN)	4032248062652	solder connection, 5.08 mm, Number of poles: 10, 180°, Solder pin	UL: 300 V / 10 A	
Qty.	50 pc(s).	length (l): 3.2 mm, tinned, orange, Box		

SL 5.08/135B

Male connectors with 135° outlet direction. The solder pin length is optimised for wave flow soldering. The pin headers provide space for labelling and can be coded.

General ordering data

Type	SL 5.08/05/135B 3.2SN O ...	Version	Product data	Packaging
Order No.	1605560000	PCB plug-in connector, male header, Dovetails for fixing blocks, THT	IEC: 400 V / 17 A	Box
GTIN (EAN)	4008190089948	solder connection, 5.08 mm, Number of poles: 5, 135°, Solder pin	UL: 300 V / 15 A	
Qty.	50 pc(s).	length (l): 3.2 mm, tinned, orange, Box		

OMNIMATE Signal - series BL/SL 5.08
BLL 5.08/05/90 3.2 SN OR BX

Weidmüller Interface GmbH & Co. KG
Klingenbergstraße 26
D-32758 Detmold
Germany
Fon: +49 5231 14-0
Fax: +49 5231 14-292083
www.weidmueller.com

Mating connector (fully pluggable)

SL 5.08/180

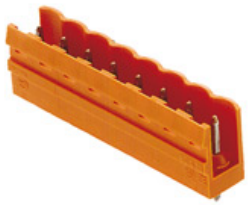

Male connectors with straight outlet direction. The solder pin length is optimised for wave flow soldering. The pin headers provide space for labelling and can be coded.

General ordering data

Type	SL 5.08/05/180 3.2SN OR ...	Version	Product data	Packaging
Order No.	1517560000	PCB plug-in connector, male header, open side, THT solder	IEC: 400 V / 18 A	Box
GTIN (EAN)	4008190145170	connection, 5.08 mm, Number of poles: 5, 180°, Solder pin length (l):	UL: 300 V / 15 A	
Qty.	50 pc(s).	3.2 mm, tinned, orange, Box		

SLS 5.08/180 SN

Male plugs with clamping-yoke screw wire-connect system. The male plugs provide space for labelling and can be coded.

General ordering data

Type	SLS 5.08/05/180 SN OR BX	Version	Product data	Packaging
Order No.	1627120000	PCB plug-in connector, male plug, 5.08 mm, Number of poles: 5,	IEC: 400 V / 21.5 A / 0.2 - 2.5 mm²	Box
GTIN (EAN)	4008190199630	180°, Clamping yoke connection, Clamping range, max. : 3.31 mm²,	UL: 300 V / 14 A / AWG 26 - AWG 12	
Qty.	72 pc(s).	Box		

OMNIMATE Signal - series BL/SL 5.08
BLL 5.08/05/90 3.2 SN OR BX

Weidmüller Interface GmbH & Co. KG
Klingenbergstraße 26
D-32758 Detmold
Germany
Fon: +49 5231 14-0
Fax: +49 5231 14-292083
www.weidmueller.com

Mating connector (fully pluggable)

SL 5.08HC/90

Pin headers made from glass-fibre-reinforced plastic with 90° wire outlet; optimised for wave soldering. The flange variant (F) can be screwed onto the respective counter piece or the circuit board. There is no need for an extra screw to connect the circuit board when the solder flange (LF) version is used. This also protects the solder points from mechanical strain. All pin headers can be manually coded or ordered pre-coded. HC = High Current.

General ordering data

Type	SL 5.08HC/05/90 3.2SN B ...	Version	Product data	Packaging
Order No.	1155060000	PCB plug-in connector, male header, open side, THT solder	IEC: 400 V / 24 A	Box
GTIN (EAN)	4050118050783	connection, 5.08 mm, Number of poles: 5, 90°, Solder pin length (l):	UL: 300 V / 18.5 A	
Qty.	50 pc(s).	3.2 mm, tinned, black, Box		
Type	SL 5.08HC/05/90 3.2SN O ...	Version	Product data	Packaging
Order No.	1146790000	PCB plug-in connector, male header, open side, THT solder	IEC: 400 V / 24 A	Box
GTIN (EAN)	4050118051476	connection, 5.08 mm, Number of poles: 5, 90°, Solder pin length (l):	UL: 300 V / 18.5 A	
Qty.	50 pc(s).	3.2 mm, tinned, orange, Box		

SL-SMT 5.08/270GH Box

High-temperature-resistant, straight, open pin header. Packed in box or tape. On tape and with 1.5 mm solder pin, optimised for automatic assembly. 3.2 mm solder pin suitable for reflow and wave soldering. The pin headers provide space for labelling and can be coded. HC = High Current.

General ordering data

Type	SL-SMT 5.08/05/270GH 1. ...	Version	Product data	Packaging
Order No.	1877040000	PCB plug-in connector, male header, closed side, THT/THR solder	IEC: 400 V / 27.5 A	Box
GTIN (EAN)	4032248467549	connection, 5.08 mm, Number of poles: 5, 270°, Solder pin length (l):	UL: 300 V / 18.5 A	
Qty.	50 pc(s).	1.5 mm, tinned, black, Box		
Type	SL-SMT 5.08HC/05/270GH ...	Version	Product data	Packaging
Order No.	1877400000	PCB plug-in connector, male header, closed side, THT/THR solder	IEC: 400 V / 27.5 A	Box
GTIN (EAN)	4032248468034	connection, 5.08 mm, Number of poles: 5, 270°, Solder pin length (l):	UL: 300 V / 18.5 A	
Qty.	50 pc(s).	3.2 mm, tinned, black, Box		

OMNIMATE Signal - series BL/SL 5.08
BLL 5.08/05/90 3.2 SN OR BX

Weidmüller Interface GmbH & Co. KG
Klingenbergstraße 26
D-32758 Detmold
Germany
Fon: +49 5231 14-0
Fax: +49 5231 14-292083
www.weidmueller.com

Mating connector (fully pluggable)

SL-SMT 5.08/270GL Box

High-temperature-resistant, straight, open pin header. Packed in box or tape. On tape and with 1.5 mm solder pin, optimised for automatic assembly. 3.2 mm solder pin suitable for reflow and wave soldering. The pin headers provide space for labelling and can be coded. HC = High Current.

General ordering data

Type	SL-SMT 5.08HC/05/270GL ...	Version	Product data	Packaging
Order No.	1877520000	PCB plug-in connector, male header, closed side, THT/THR solder	IEC: 400 V / 27.5 A	Box
GTIN (EAN)	4032248468140	connection, 5.08 mm, Number of poles: 5, 270°, Solder pin length (l):	UL: 300 V / 18.5 A	
Qty.	50 pc(s).	3.2 mm, tinned, black, Box		
Type	SL-SMT 5.08HC/05/270GL ...	Version	Product data	Packaging
Order No.	1877150000	PCB plug-in connector, male header, closed side, THT/THR solder	IEC: 400 V / 27.5 A	Box
GTIN (EAN)	4032248467600	connection, 5.08 mm, Number of poles: 5, 270°, Solder pin length (l):	UL: 300 V / 18.5 A	
Qty.	50 pc(s).	1.5 mm, tinned, black, Box		

OMNIMATE Signal - series BL/SL 5.08
BLL 5.08/05/90 3.2 SN OR BX

Weidmüller Interface GmbH & Co. KG
Klingenbergstraße 26
D-32758 Detmold
Germany
Fon: +49 5231 14-0
Fax: +49 5231 14-292083
www.weidmueller.com

Accessories

Coding elements

Only connects what is supposed to be connected: the right connection at the right place.
Coding elements and locking devices clearly assign connecting elements during the manufacturing process and operation
The coding elements and locking devices are inserted prior to assembly or during the cable assembly phase.
The Weidmüller alternative: configure online using the variant configurator to precode prior to delivery.
Incorrect assembly on the circuit board and incorrect plugging of connecting elements is no longer possible.
The advantage: no troubleshooting during manufacture and no operational errors by the user.

General ordering data

Type	BLZ/SL KO BK BX	Version	Product data	Packaging
Order No.	1545710000	PCB plug-in connector, Accessories, Coding element, black, Number		Box
GTIN (EAN)	4008190087142	of poles: 1		
Qty.	50 pc(s).			
Type	BLZ/SL KO OR BX	Version	Product data	Packaging
Order No.	1573010000	PCB plug-in connector, Accessories, Coding element, orange, Number		Box
GTIN (EAN)	4008190048396	of poles: 1		
Qty.	100 pc(s).			

MASSE OHNE TOLERANZ SIND KEINE PRUEFMASSE
DIMS. WITHOUT TOLERANCE ARE NOT CONTROL DIMS.

DIE DEUTSCHE VERSION IST VERBINDLICH
THE GERMAN VERSION IS BINDING

WEITERGABE SOWIE VERVIELFAELTIGUNG DIESES DOKUMENTS, VERWERTUNG UND MITTEILUNG SEINES INHALTS SIND VERBOTEN, SOWEIT NICHT AUSDRUECKLICH GESTATTET.
ZUWIDERHANDLUNGEN VERPFLICHTEN ZU SCHADENERSATZ. ALLE RECHTE FUER DEN FALL DER PATENT-, GEBRAUCHSMUSTER- ODER GESCHMACKSMUSTEREINTRAGUNG VORBEHALTEN.
THE REPRODUCTION, DISTRIBUTION AND UTILIZATION OF THIS DOCUMENT AS WELL AS THE COMMUNICATION OF ITS CONTENTS TO OTHERS WITHOUT EXPLICID AUTHORIZATION IS PROHIBITED.
OFFENDERS WILL BE HELD LIABLE FOR THE PAYMENT OF DAMAGES. WEIDMUELLER EXCLUSIVELY RESERVES THE RIGHT TO FILE FOR PATENTS, UTILITY MODELS OR DESIGNS.
© WEIDMUELLER INTERFACE GmbH & Co.KG

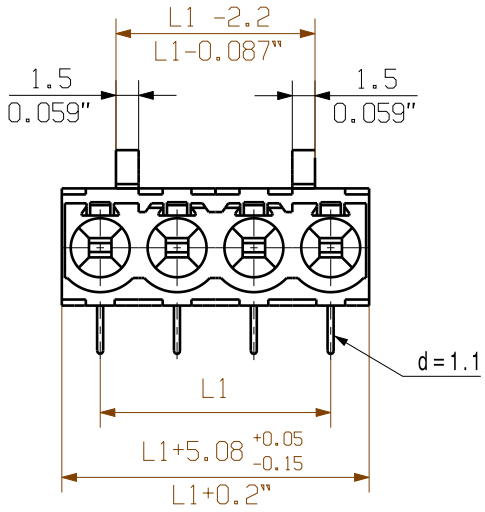

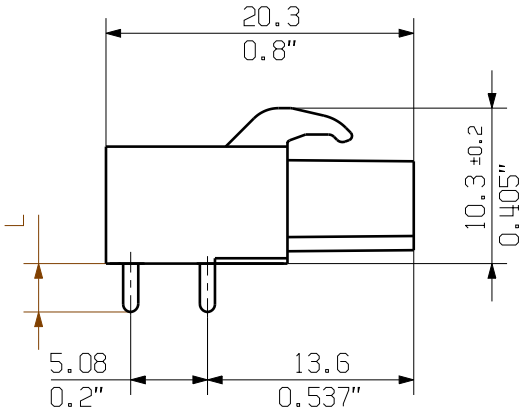

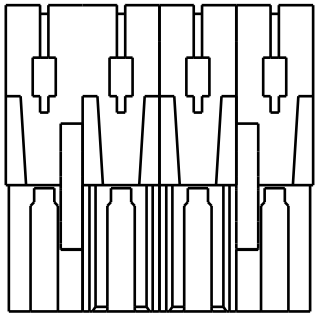

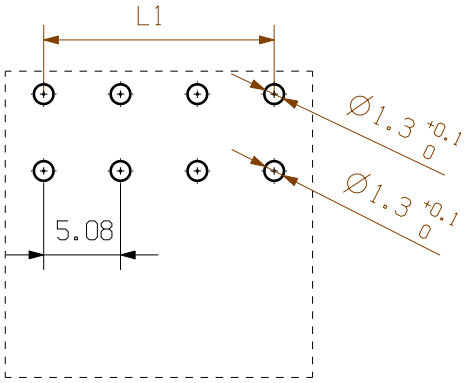

HOLE PATTERN

n	L1 [mm]	L1 [Inch]
24	116,84	4,600
23	111,76	4,400
22	106,68	4,200
21	101,60	4,000
20	96,52	3,800
19	91,44	3,600
18	86,36	3,400
17	81,28	3,200
16	76,20	3,000
15	71,12	2,800
14	66,04	2,600
13	60,96	2,400
12	55,88	2,200
11	50,80	2,000
10	45,72	1,800
9	40,64	1,600
8	35,56	1,400
7	30,48	1,200
6	25,40	1,000
5	20,32	0,800
4	15,24	0,600
3	10,16	0,400
2	5,08	0,200

For the mounting of PCBs, it should be noted that the rated data relates only to the PCB components alone.
The neccessary creepage and clearance paths must be observed in connection with the respective applicant in accordance to IEC 664 / VDE 0110.
The current-carrying capacity and pitch tolerance is to be determined according to DIN IEC 326 part 3 very fine.

Weidmüller PCB components are tested to the DIN EN 61984 standard, and are valid for its field of application. Provided that the components are used to the intended purpose, all requirements with respect to the occuring of electrical, mechanical, thermic and corrosive stress will be satisfied.

PINLÄNGE L PIN LENGTH L	TOLERANZ TOLERANCE
3,2	0,1 -0,3
4,5	0,1 -0,3

SHOWN: BLL 5.08/04/90

RoHS COMPLIANT

METRIC TOLERANCES:
X. = ±0.3
X.X = ±0.1
X.XX = ±0.05

53948/5
08.11.10
HOHLBEIN_K
01
MODIFICATION

CAT.NO.:.

Weidmüller

C 21265 22
DRAWING NO. ISSUE NO.
SHEET 01 OF 02 SHEETS

	DATE	NAME
DRAWN	19.09.2003	GROESCHL_A
RESPONSIBLE		HERTEL_S
CHECKED	26.11.2010	HECKERT_M
APPROVED		HECKERT_M

SCALE: 2/1
SUPERSEDES: .

BLL 5.08/../.. ...
BUCHSENLEISTE
SOCKET BLOCK

PRODUCT FILE: BLL5.08 7138

Recommended wave solderding profiles

Weidmüller Interface GmbH & Co. KG
Klingenbergstraße 16
D-32758 Detmold
Germany
Fon: +49 5231 14-0
Fax: +49 5231 14-292083
www.weidmueller.com

Single Wave:

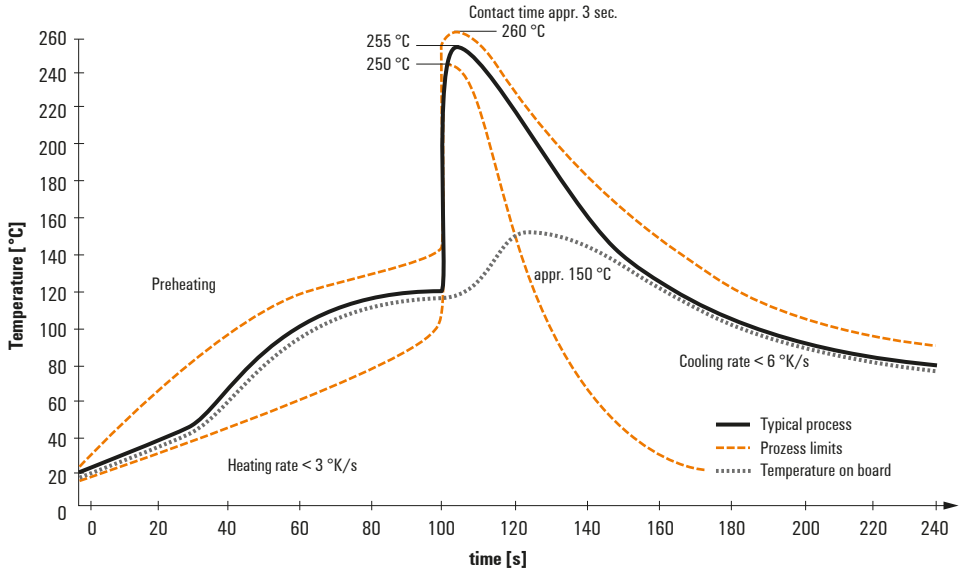

Double Wave:

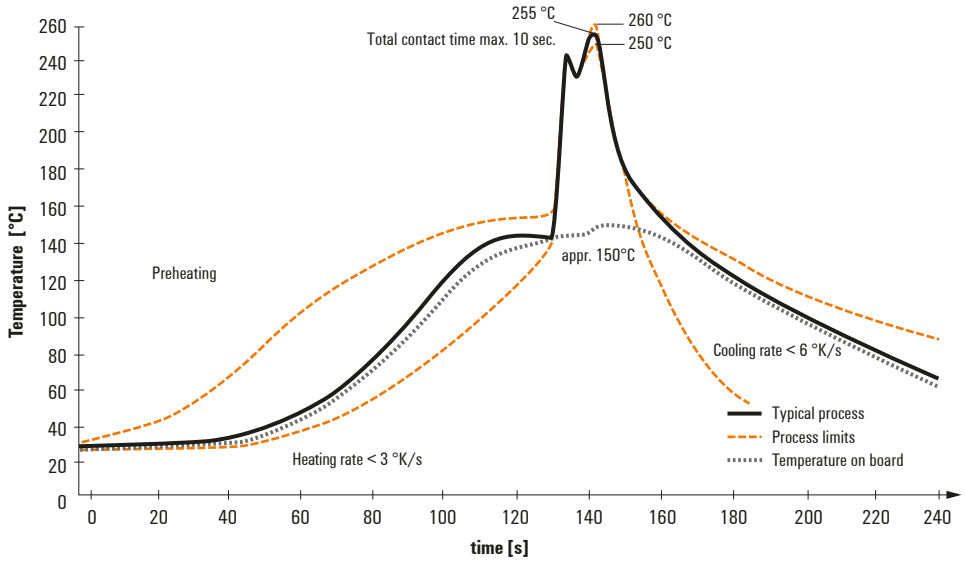

Wave soldering profiles

Wired connection elements should be processed in accordance with the DIN EN 61760-1 standard. We have included two recommendations for practical wave soldering profiles, with which Weidmüller PCB terminals and connectors are qualified.

When choosing a suitable profile for your application, the following factors also need to be considered:
- PCB thickness
- Proportion of Cu in the layers
- Single/double-sided assembly
- Product range
- Heating and cooling rates

The single and double wave profiles each indicate the recommended operating range, including the maximum soldering temperature of 260°C. In practice, the maximum soldering temperature is quite often well below the above maximum profile.

We reserve the right to make technical changes.