OMNIMATE Signal - series BL/SL 3.50
BL 3.50/23/180F SN BK BX

Weidmüller Interface GmbH & Co. KG
Klingenbergstraße 26
D-32758 Detmold
Germany
Fon: +49 5231 14-0
Fax: +49 5231 14-292083
www.weidmueller.com

Product image

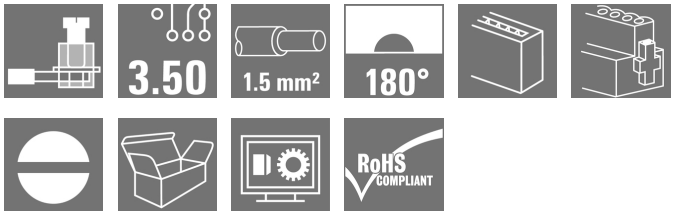

Similar to illustration

Female connectors with clamping yoke screw system for connecting conductors at 3.50 mm pitch. They provide space for labelling and can be coded.

General ordering data

Type	BL 3.50/23/180F SN BK BX
Order No.	1620900000
Version	PCB plug-in connector, female plug, 3.50 mm, Number of poles: 23, 180°, Clamping yoke connection, Clamping range, max. : 1.5 mm², Box
GTIN (EAN)	4008190164904
Qty.	18 pc(s).
Product data	IEC: 320 V / 17 A / 0.2 - 1.5 mm² UL: 300 V / 10 A / AWG 28 - AWG 14
Packaging	Box

Creation date May 3, 2020 8:41:51 PM CEST

OMNIMATE Signal - series BL/SL 3.50
BL 3.50/23/180F SN BK BX

Weidmüller Interface GmbH & Co. KG
Klingenbergstraße 26
D-32758 Detmold
Germany
Fon: +49 5231 14-0
Fax: +49 5231 14-292083
www.weidmueller.com

Technical data

Dimensions and weights

Width	87.5 mm	Width (inches)	3.445 inch
Height	13 mm	Height (inches)	0.512 inch
Depth	18.5 mm	Depth (inches)	0.728 inch
Net weight	22.15 g		

System Parameters

Product family	OMNIMATE Signal - series BL/SL 3.50	Type of connection	Field connection
Wire connection method	Clamping yoke connection	Pitch in mm (P)	3.5 mm
Pitch in inches (P)	0.138 inch	Conductor outlet direction	180°
Number of poles	23	L1 in mm	77 mm
L1 in inches	3.031 inch	Number of rows	1
Pin series quantity	1	Rated cross-section	1.5 mm²
Touch-safe protection acc. to DIN VDE 57 106	Safe from finger touch	Touch-safe protection acc. to DIN VDE 0470	IP 20
Volume resistance	≤ 5mΩ	Can be coded	Yes
Stripping length	6 mm	Tightening torque for screw flange, min.	0.15 Nm
Tightening torque for screw flange, max.	0.2 Nm	Tightening torque, min.	0.2 Nm
Tightening torque, max.	0.25 Nm	Clamping screw	M 2
Screwdriver blade	0.4 x 2.5	Screwdriver blade standard	DIN 5264
Plugging cycles	25	Plugging force/pole, max.	7 N
Pulling force/pole, max.	5 N		

Material data

Insulating material	PBT	Colour	black
Colour chart (similar)	RAL 9011	Insulating material group	IIIa
Comparative Tracking Index (CTI)	≥ 200	Insulation strength	≥ 10^8 Ω
UL 94 flammability rating	V-0	GWFI	960 °C
Contact material	Copper alloy	Contact surface	tinned
Layer structure of plug contact	4-8 µm Sn hot-dip tinned	Storage temperature, min.	-25 °C
Storage temperature, max.	50 °C	Max. relative humidity during storage	70 %
Operating temperature, min.	-50 °C	Operating temperature, max.	100 °C
Temperature range, installation, min.	-30 °C	Temperature range, installation, max.	100 °C

Conductors suitable for connection

Clamping range, min.	0.08 mm²
Clamping range, max.	1.5 mm²
Wire connection cross section AWG, min.	AWG 28
Wire connection cross section AWG, max.	AWG 14
Solid, min. H05(07) V-U	0.2 mm²
Solid, max. H05(07) V-U	1.5 mm²
Flexible, min. H05(07) V-K	0.2 mm²
Flexible, max. H05(07) V-K	1.5 mm²
w. plastic collar ferrule, DIN 46228 pt 4, min.	0.2 mm²
w. plastic collar ferrule, DIN 46228 pt 4, max.	1.5 mm²
w. wire end ferrule, DIN 46228 pt 1, min.	0.2 mm²
w. wire end ferrule, DIN 46228 pt 1, max.	1.5 mm²

OMNIMATE Signal - series BL/SL 3.50
BL 3.50/23/180F SN BK BX

Weidmüller Interface GmbH & Co. KG
Klingenbergstraße 26
D-32758 Detmold
Germany
Fon: +49 5231 14-0
Fax: +49 5231 14-292083
www.weidmueller.com

Technical data

Plug gauge in accordance with EN 60999 a x b; ø	2.4 mm x 1.5 mm		
Clampable conductor	Cross-section for conductor connection	Type	fine-wired
		nominal	0.5 mm²
	wire end ferrule	Stripping length	nominal 8 mm
		Recommended wire-end ferrule	H0,5/12 OR
		Stripping length	nominal 6 mm
		Recommended wire-end ferrule	H0,5/6
	Cross-section for conductor connection	Type	fine-wired
		nominal	0.75 mm²
	wire end ferrule	Stripping length	nominal 8 mm
		Recommended wire-end ferrule	H0,75/12 W
		Stripping length	nominal 6 mm
		Recommended wire-end ferrule	H0,75/6
	Cross-section for conductor connection	Type	fine-wired
		nominal	1 mm²
	wire end ferrule	Stripping length	nominal 8 mm
		Recommended wire-end ferrule	H1,0/12 GE
		Stripping length	nominal 6 mm
		Recommended wire-end ferrule	H1,0/6
	Cross-section for conductor connection	Type	fine-wired
		nominal	0.25 mm²
	wire end ferrule	Stripping length	nominal 8 mm
		Recommended wire-end ferrule	H0,25/10 HBL
		Stripping length	nominal 5 mm
		Recommended wire-end ferrule	H0,25/5
	Cross-section for conductor connection	Type	fine-wired
		nominal	0.34 mm²
	wire end ferrule	Stripping length	nominal 8 mm
		Recommended wire-end ferrule	H0,34/10 TK
Reference text	The outside diameter of the plastic collar should not be larger than the pitch (P), Length of ferrules is to be chosen depending on the product and the rated voltage.		
Max. clamping range	1.5 mm²		

Rated data acc. to IEC

tested acc. to standard	IEC 60664-1, IEC 61984	Rated current, min. number of poles (Tu=20°C)	17 A
Rated current, max. number of poles (Tu=20°C)	12 A	Rated current, min. number of poles (Tu=40°C)	14.5 A
Rated current, max. number of poles (Tu=40°C)	10 A	Rated voltage for surge voltage class / pollution degree II/2	320 V
Rated voltage for surge voltage class / pollution degree III/2	160 V	Rated voltage for surge voltage class / pollution degree III/3	160 V
Rated impulse voltage for surge voltage class/ pollution degree II/2	2.5 kV	Rated impulse voltage for surge voltage class/ pollution degree III/2	2.5 kV
Rated impulse voltage for surge voltage class/ contamination degree III/3	2.5 kV	Short-time withstand current resistance	3 x 1s with 100 A

OMNIMATE Signal - series BL/SL 3.50
BL 3.50/23/180F SN BK BX

Weidmüller Interface GmbH & Co. KG
Klingenbergstraße 26
D-32758 Detmold
Germany
Fon: +49 5231 14-0
Fax: +49 5231 14-292083
www.weidmueller.com

Technical data

Rated data acc. to CSA

Institute (CSA)		Certificate No. (CSA)	
			154685-1318353
Rated voltage (Use group B / CSA)	300 V	Rated voltage (Use group D / CSA)	300 V
Rated current (Use group B / CSA)	10 A	Rated current (Use group D / CSA)	10 A
Wire cross-section, AWG, min.	AWG 28	Wire cross-section, AWG, max.	AWG 14
Reference to approval values	Specifications are maximum values, details - see approval certificate.		

Rated data acc. to UL 1059

Institute (UR)		Certificate No. (UR)	
			E60693
Rated voltage (Use group B / UL 1059)	300 V	Rated voltage (Use group D / UL 1059)	300 V
Rated current (Use group B / UL 1059)	10 A	Rated current (Use group D / UL 1059)	10 A
Wire cross-section, AWG, min.	AWG 28	Wire cross-section, AWG, max.	AWG 14
Reference to approval values	Specifications are maximum values, details - see approval certificate.		

Packing

Packaging	Box	VPE length	61 mm
VPE width	100 mm	VPE height	118 mm

Classifications

ETIM 6.0	EC002638	ETIM 7.0	EC002638
eClass 9.0	27-44-03-09	eClass 9.1	27-44-03-09
eClass 10.0	27-44-03-09	UNSPSC	30-21-18-10

OMNIMATE Signal - series BL/SL 3.50
BL 3.50/23/180F SN BK BX

Weidmüller Interface GmbH & Co. KG
Klingenbergstraße 26
D-32758 Detmold
Germany
Fon: +49 5231 14-0
Fax: +49 5231 14-292083
www.weidmueller.com

Technical data

Notes

Notes	• Additional colours on request • Gold-plated contact surfaces on request • Rated current related to rated cross-section & min. No. of poles. • Max. outer diameter of the conductor: 2.9 mm • Wire end ferrule without plastic collar to DIN 46228/1 • Wire end ferrule with plastic collar to DIN 46228/4 • P on drawing = pitch • Rated data refer only to the component itself. Clearance and creepage distances to other components are to be designed in accordance with the relevant application standards.
IPC conformity	Conformity: The products are developed, manufactured and delivered according international recognized standards and norms and comply with the assured properties in the data sheet resp. fulfill decorative properties in accordance with IPC-A-610 "Class 2". Further claims on the products can be evaluated on request.

Approvals

Approvals	
ROHS	Conform

Downloads

Approval/Certificate/Document of Conformity	Declaration of the Manufacturer
Brochure/Catalogue	FL DRIVES EN MB DEVICE MANUF. EN FL DRIVES DE CAT 2 PORTFOLIOGUIDE EN FL BUILDING SAFETY EN FL APPL LED LIGHTING EN FL INDUSTR.CONTROLS EN FL MACHINE SAFETY EN FL HEATING ELECTR EN FL APPL_INVERTER EN FL_BASE_STATION_EN FL ELEVATOR EN FL POWER SUPPLY EN FL 72H SAMPLE SER EN PO OMNIMATE EN
Engineering Data	EPLAN, WSCAD
Engineering Data	STEP

OMNIMATE Signal - series BL/SL 3.50
BL 3.50/23/180F SN BK BX

Weidmüller Interface GmbH & Co. KG
Klingenbergstraße 26
D-32758 Detmold
Germany
Fon: +49 5231 14-0
Fax: +49 5231 14-292083
www.weidmueller.com

Drawings

Dimensional drawing

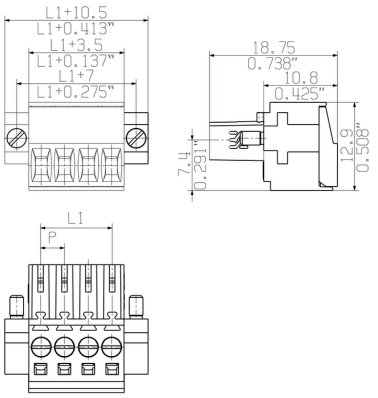

Graph

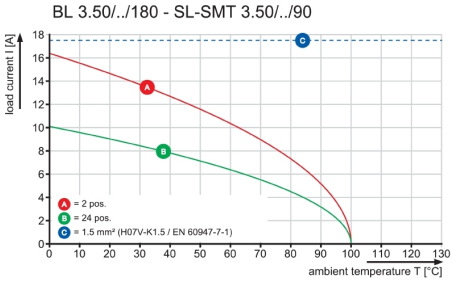

Graph

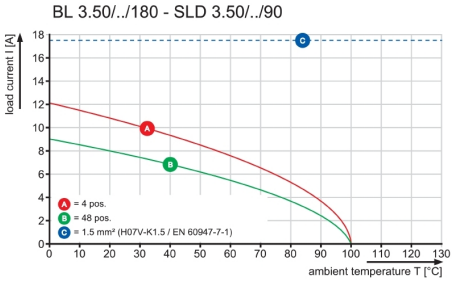

Graph

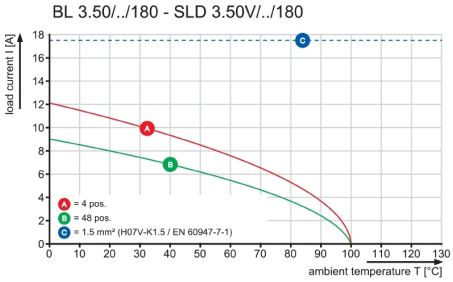

Graph

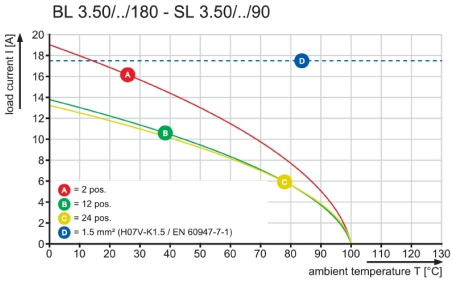

OMNIMATE Signal - series BL/SL 3.50
BL 3.50/23/180F SN BK BX

Weidmüller Interface GmbH & Co. KG
Klingenbergstraße 26
D-32758 Detmold
Germany
Fon: +49 5231 14-0
Fax: +49 5231 14-292083
www.weidmueller.com

Mating connector (conditionally pluggable)

SL-THR 3.5/135F

High-temperature-resistant male header, 3.50 mm pitch.

- **Plugging direction parallel (90°), straight 180° or angled (135°) to PCB**
- **Housing variants: closed side (G), screw flange (F), solder flange (LF) or snap-on solder flange (RF)**
- **Optimised for the SMT process**
- **Pin length 3.2 mm universal for all soldering methods**
- **Pin length 1.5 mm optimised for reflow soldering methods**
- **Packed either in a box (BX) or tape-on-reel (RL)**
- **Male header can be coded**

General ordering data

Type	SL-SMT 3.50/23/135F 3.2 ...	Version	Product data	Packaging
Order No.	1003730000	PCB plug-in connector, male header, Flange, THT/THR solder	IEC: 320 V / 15 A	Box
GTIN (EAN)	4032248700356	connection, 3.50 mm, Number of poles: 23, 135°, Solder pin length	UL: 300 V / 10 A	
Qty.	18 pc(s).	(l): 3.2 mm, tinned, black, Box		

SLD 3.50/90G

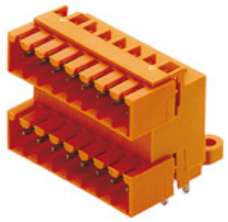

Two-tier pin header for wave soldering in 3.50 mm pitch. The connector is available in open, closed and flange versions. The male connectors provide space for labelling and can be coded. Packed in a cardboard box.

General ordering data

Type	SLD 3.50/46/90G 3.2SN O ...	Version	Product data	Packaging
Order No.	1633790000	PCB plug-in connector, male header, closed side, THT solder	IEC: 200 V / 10.5 A	Box
GTIN (EAN)	4008190258245	connection, 3.50 mm, Number of poles: 46, 90°, Solder pin length (l):	UL: 300 V / 8 A	
Qty.	10 pc(s).	3.2 mm, tinned, orange, Box		
Type	SLD 3.50/46/90G 3.2SN D ...	Version	Product data	Packaging
Order No.	1675060000	PCB plug-in connector, male header, closed side, THT solder	IEC: 200 V / 10.5 A	Box
GTIN (EAN)	4008190445751	connection, 3.50 mm, Number of poles: 46, 90°, Solder pin length (l):	UL: 300 V / 8 A	
Qty.	10 pc(s).	3.2 mm, tinned, Signal green, Box		
Type	SLD 3.50/46/90G 4.5SN B ...	Version	Product data	Packaging
Order No.	1634480000	PCB plug-in connector, male header, closed side, THT solder	IEC: 200 V / 10.5 A	Box
GTIN (EAN)	4008190258931	connection, 3.50 mm, Number of poles: 46, 90°, Solder pin length (l):	UL: 300 V / 8 A	
Qty.	10 pc(s).	4.5 mm, tinned, black, Box		

OMNIMATE Signal - series BL/SL 3.50
BL 3.50/23/180F SN BK BX

Weidmüller Interface GmbH & Co. KG
Klingenbergstraße 26
D-32758 Detmold
Germany
Fon: +49 5231 14-0
Fax: +49 5231 14-292083
www.weidmueller.com

Mating connector (conditionally pluggable)

SL-SMT 3.5/180G Box

High-temperature-resistant male header, 3.50 mm pitch.

- **Plugging direction parallel (90°), straight 180° or angled (135°) to PCB**
- **Housing variants: closed side (G), screw flange (F), solder flange (LF) or snap-on solder flange (RF)**
- **Optimised for the SMT process**
- **Pin length 3.2 mm universal for all soldering methods**
- **Pin length 1.5 mm optimised for reflow soldering methods**
- **Packed either in a box (BX) or tape-on-reel (RL)**
- **Male header can be coded**

General ordering data

Type	SL-SMT 3.50/23/180G 3.2 ...	Version	Product data	Packaging
Order No.	1842520000	PCB plug-in connector, male header, closed side, THT/THR solder	IEC: 320 V / 15 A	Box
GTIN (EAN)	4032248353880	connection, 3.50 mm, Number of poles: 23, 180°, Solder pin length	UL: 300 V / 10 A	
Qty.	20 pc(s).	(l): 3.2 mm, tinned, black, Box		
Type	SL-SMT 3.50/23/180G 1.5 ...	Version	Product data	Packaging
Order No.	1753192001	PCB plug-in connector, male header, closed side, THT/THR solder	IEC: 320 V / 15 A	Box
GTIN (EAN)	4032248131099	connection, 3.50 mm, Number of poles: 23, 180°, Solder pin length	UL: 300 V / 10 A	
Qty.	20 pc(s).	(l): 1.5 mm, tinned, black, Box		

OMNIMATE Signal - series BL/SL 3.50
BL 3.50/23/180F SN BK BX

Weidmüller Interface GmbH & Co. KG
Klingenbergstraße 26
D-32758 Detmold
Germany
Fon: +49 5231 14-0
Fax: +49 5231 14-292083
www.weidmueller.com

Mating connector (conditionally pluggable)

SL-SMT 3.5/180G Tray

High-temperature-resistant male header, 3.50 mm pitch.

- **Plugging direction parallel (90°), straight 180° or angled (135°) to PCB**
- **Housing variants: closed side (G), screw flange (F), solder flange (LF) or snap-on solder flange (RF)**
- **Optimised for the SMT process**
- **Pin length 3.2 mm universal for all soldering methods**
- **Pin length 1.5 mm optimised for reflow soldering methods**
- **Packed either in a box (BX) or tape-on-reel (RL)**
- **Male header can be coded**

General ordering data

Type	SL-SMT 3.50/23/180G 1.5 ...	Version	Product data	Packaging
Order No.	1753193001	PCB plug-in connector, male header, closed side, THT/THR solder	IEC: 320 V / 15 A	Tray
GTIN (EAN)	4032248133062	connection, 3.50 mm, Number of poles: 23, 180°, Solder pin length	UL: 300 V / 10 A	
Qty.	18 pc(s).	(l): 1.5 mm, tinned, black, Tray		

SL-SMT 3.5/90G Tray

High-temperature-resistant male header, 3.50 mm pitch.

- **Plugging direction parallel (90°), straight 180° or angled (135°) to PCB**
- **Housing variants: closed side (G), screw flange (F), solder flange (LF) or snap-on solder flange (RF)**
- **Optimised for the SMT process**
- **Pin length 3.2 mm universal for all soldering methods**
- **Pin length 1.5 mm optimised for reflow soldering methods**
- **Packed either in a box (BX) or tape-on-reel (RL)**
- **Male header can be coded**

General ordering data

Type	SL-SMT 3.50/23/90G 1.5S ...	Version	Product data	Packaging
Order No.	1761753001	PCB plug-in connector, male header, closed side, THT/THR solder	IEC: 320 V / 15 A	Tray
GTIN (EAN)	4032248134021	connection, 3.50 mm, Number of poles: 23, 90°, Solder pin length (l):	UL: 300 V / 10 A	
Qty.	18 pc(s).	1.5 mm, tinned, black, Tray		

OMNIMATE Signal - series BL/SL 3.50
BL 3.50/23/180F SN BK BX

Weidmüller Interface GmbH & Co. KG
Klingenbergstraße 26
D-32758 Detmold
Germany
Fon: +49 5231 14-0
Fax: +49 5231 14-292083
www.weidmueller.com

Mating connector (conditionally pluggable)

SL 3.50/180

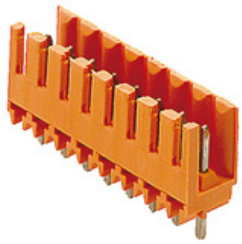

Pin headers for wave soldering in 3.50 mm pitch

- Plugging direction is parallel (90°), straight 180° or angled (135°) to the PCB
- Housing variant: screw flange (F)
- Packed in a cardboard box (BX)
- Pin header can be coded

General ordering data

Type	SL 3.50/23/180 3.2SN OR ...	Version	Product data	Packaging
Order No.	1621460000	PCB plug-in connector, male header, open side, THT solder	IEC: 320 V / 17 A	Box
GTIN (EAN)	4008190173494	connection, 3.50 mm, Number of poles: 23, 180°, Solder pin length	UL: 300 V / 10 A	
Qty.	20 pc(s).	(l): 3.2 mm, tinned, orange, Box		

SL 3.50/180G

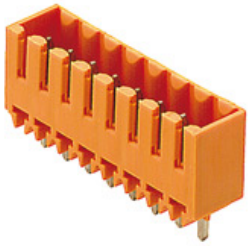

Pin headers for wave soldering in 3.50 mm pitch

- Plugging direction is parallel (90°), straight 180° or angled (135°) to the PCB
- Housing variant: screw flange (F)
- Packed in a cardboard box (BX)
- Pin header can be coded

General ordering data

Type	SL 3.50/23/180G 3.2SN O ...	Version	Product data	Packaging
Order No.	1621850000	PCB plug-in connector, male header, closed side, THT solder	IEC: 320 V / 17 A	Box
GTIN (EAN)	4008190181536	connection, 3.50 mm, Number of poles: 23, 180°, Solder pin length	UL: 300 V / 10 A	
Qty.	20 pc(s).	(l): 3.2 mm, tinned, orange, Box		

OMNIMATE Signal - series BL/SL 3.50
BL 3.50/23/180F SN BK BX

Weidmüller Interface GmbH & Co. KG
Klingenbergstraße 26
D-32758 Detmold
Germany
Fon: +49 5231 14-0
Fax: +49 5231 14-292083
www.weidmueller.com

Mating connector (conditionally pluggable)

SL 3.50/90

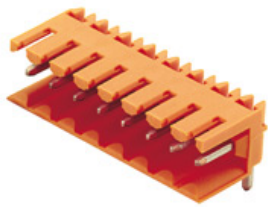

Pin headers for wave soldering in 3.50 mm pitch

- Plugging direction is parallel (90°), straight 180° or angled (135°) to the PCB
- Housing variant: screw flange (F)
- Packed in a cardboard box (BX)
- Pin header can be coded

General ordering data

Type	SL 3.50/23/90 3.2SN GY ...	Version	Product data	Packaging
Order No.	1619280000	PCB plug-in connector, male header, open side, THT solder	IEC: 320 V / 17 A	Box
GTIN (EAN)	4008190137144	connection, 3.50 mm, Number of poles: 23, 90°, Solder pin length (l):	UL: 300 V / 10 A	
Qty.	20 pc(s).	3.2 mm, tinned, Pebble grey, Box		
Type	SL 3.50/23/90 3.2SN OR ...	Version	Product data	Packaging
Order No.	1619050000	PCB plug-in connector, male header, open side, THT solder	IEC: 320 V / 17 A	Box
GTIN (EAN)	4008190132965	connection, 3.50 mm, Number of poles: 23, 90°, Solder pin length (l):	UL: 300 V / 10 A	
Qty.	20 pc(s).	3.2 mm, tinned, orange, Box		
Type	SL 3.50/23/90 3.2SN DKG ...	Version	Product data	Packaging
Order No.	1619360000	PCB plug-in connector, male header, open side, THT solder	IEC: 320 V / 17 A	Box
GTIN (EAN)	4008190138400	connection, 3.50 mm, Number of poles: 23, 90°, Solder pin length (l):	UL: 300 V / 10 A	
Qty.	20 pc(s).	3.2 mm, tinned, Signal green, Box		
Type	SL 3.50/23/90 4.5SN OR ...	Version	Product data	Packaging
Order No.	1617800000	PCB plug-in connector, male header, open side, THT solder	IEC: 320 V / 17 A	Box
GTIN (EAN)	4008190111854	connection, 3.50 mm, Number of poles: 23, 90°, Solder pin length (l):	UL: 300 V / 10 A	
Qty.	20 pc(s).	4.5 mm, tinned, orange, Box		
Type	SL 3.50/23/90 4.5SN BK ...	Version	Product data	Packaging
Order No.	1617880000	PCB plug-in connector, male header, open side, THT solder	IEC: 320 V / 17 A	Box
GTIN (EAN)	4008190113681	connection, 3.50 mm, Number of poles: 23, 90°, Solder pin length (l):	UL: 300 V / 10 A	
Qty.	20 pc(s).	4.5 mm, tinned, black, Box		

SL 3.50/90G

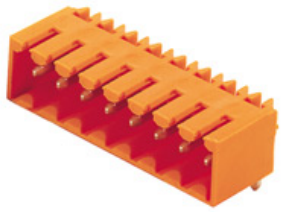

Pin headers for wave soldering in 3.50 mm pitch

- Plugging direction is parallel (90°), straight 180° or angled (135°) to the PCB
- Housing variant: screw flange (F)
- Packed in a cardboard box (BX)
- Pin header can be coded

General ordering data

Type	SL 3.50/23/90G 4.5SN OR ...	Version	Product data	Packaging
Order No.	1617960000	PCB plug-in connector, male header, closed side, THT solder	IEC: / 17 A	Box
GTIN (EAN)	4008190114688	connection, 3.50 mm, Number of poles: 23, 90°, Solder pin length (l):	UL: 300 V / 10 A	
Qty.	20 pc(s).	4.5 mm, tinned, orange, Box		

OMNIMATE Signal - series BL/SL 3.50
BL 3.50/23/180F SN BK BX

Weidmüller Interface GmbH & Co. KG
Klingenbergstraße 26
D-32758 Detmold
Germany
Fon: +49 5231 14-0
Fax: +49 5231 14-292083
www.weidmueller.com

Mating connector (conditionally pluggable)

Type	SL 3.50/23/90G 3.2SN OR ...	Version	Product data	Packaging
Order No.	1619440000	PCB plug-in connector, male header, closed side, THT solder	IEC: / 17 A	Box
GTIN (EAN)	4008190140120	connection, 3.50 mm, Number of poles: 23, 90°, Solder pin length (l):	UL: 300 V / 10 A	
Qty.	20 pc(s).	3.2 mm, tinned, orange, Box		
Type	SL 3.50/23/90G 3.2SN GY ...	Version	Product data	Packaging
Order No.	1619670000	PCB plug-in connector, male header, closed side, THT solder	IEC: / 17 A	Box
GTIN (EAN)	4008190144487	connection, 3.50 mm, Number of poles: 23, 90°, Solder pin length (l):	UL: 300 V / 10 A	
Qty.	20 pc(s).	3.2 mm, tinned, Pebble grey, Box		
Type	SL 3.50/23/90G 4.5SN BK ...	Version	Product data	Packaging
Order No.	1618040000	PCB plug-in connector, male header, closed side, THT solder	IEC: / 17 A	Box
GTIN (EAN)	4008190115975	connection, 3.50 mm, Number of poles: 23, 90°, Solder pin length (l):	UL: 300 V / 10 A	
Qty.	20 pc(s).	4.5 mm, tinned, black, Box		
Type	SL 3.50/23/90G 3.2SN DK ...	Version	Product data	Packaging
Order No.	1619750000	PCB plug-in connector, male header, closed side, THT solder	IEC: / 17 A	Box
GTIN (EAN)	4008190146122	connection, 3.50 mm, Number of poles: 23, 90°, Solder pin length (l):	UL: 300 V / 10 A	
Qty.	20 pc(s).	3.2 mm, tinned, Signal green, Box		

SL-SMT 3.5/90G Box

High-temperature-resistant male header, 3.50 mm pitch.

- **Plugging direction parallel (90°), straight 180° or angled (135°) to PCB**
- **Housing variants: closed side (G), screw flange (F), solder flange (LF) or snap-on solder flange (RF)**
- **Optimised for the SMT process**
- **Pin length 3.2 mm universal for all soldering methods**
- **Pin length 1.5 mm optimised for reflow soldering methods**
- **Packed either in a box (BX) or tape-on-reel (RL)**
- **Male header can be coded**

General ordering data

Type	SL-SMT 3.50/23/90G 3.2S ...	Version	Product data	Packaging
Order No.	1841840000	PCB plug-in connector, male header, closed side, THT/THR solder	IEC: 320 V / 15 A	Box
GTIN (EAN)	4032248353194	connection, 3.50 mm, Number of poles: 23, 90°, Solder pin length (l):	UL: 300 V / 10 A	
Qty.	20 pc(s).	3.2 mm, tinned, black, Box		
Type	SL-SMT 3.50/23/90G 1.5S ...	Version	Product data	Packaging
Order No.	1761752001	PCB plug-in connector, male header, closed side, THT/THR solder	IEC: 320 V / 15 A	Box
GTIN (EAN)	4032248132348	connection, 3.50 mm, Number of poles: 23, 90°, Solder pin length (l):	UL: 300 V / 10 A	
Qty.	20 pc(s).	1.5 mm, tinned, black, Box		

OMNIMATE Signal - series BL/SL 3.50
BL 3.50/23/180F SN BK BX

Weidmüller Interface GmbH & Co. KG
Klingenbergstraße 26
D-32758 Detmold
Germany
Fon: +49 5231 14-0
Fax: +49 5231 14-292083
www.weidmueller.com

Mating connector (fully pluggable)

SL 3.50/135F

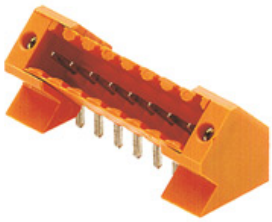

Pin headers for wave soldering in 3.50 mm pitch

- Plugging direction is parallel (90°), straight 180° or angled (135°) to the PCB
- Housing variant: screw flange (F)
- Packed in a cardboard box (BX)
- Pin header can be coded

General ordering data

Type	SL 3.50/23/135F 3.2SN O ...	Version	Product data	Packaging
Order No.	1643540000	PCB plug-in connector, male header, Flange, THT solder connection,	IEC: 320 V / 15 A	Box
GTIN (EAN)	4008190282301	3.50 mm, Number of poles: 23, 135°, Solder pin length (l): 3.2 mm,	UL: 300 V / 10 A	
Qty.	18 pc(s).	tinned, orange, Box		

SLD 3.50/90F

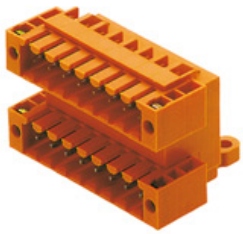

Two-tier pin header for wave soldering in 3.50 mm pitch. The connector is available in open, closed and flange versions. The male connectors provide space for labelling and can be coded. Packed in a cardboard box.

General ordering data

Type	SLD 3.50/46/90F 3.2SN O ...	Version	Product data	Packaging
Order No.	1634020000	PCB plug-in connector, male header, Flange, THT solder connection,	IEC: 200 V / 10.5 A	Box
GTIN (EAN)	4008190258474	3.50 mm, Number of poles: 46, 90°, Solder pin length (l): 3.2 mm,	UL: 300 V / 8 A	
Qty.	10 pc(s).	tinned, orange, Box		

OMNIMATE Signal - series BL/SL 3.50
BL 3.50/23/180F SN BK BX

Weidmüller Interface GmbH & Co. KG
Klingenbergstraße 26
D-32758 Detmold
Germany
Fon: +49 5231 14-0
Fax: +49 5231 14-292083
www.weidmueller.com

Mating connector (fully pluggable)

SL-SMT 3.5/90LF Box

High-temperature-resistant male header, 3.50 mm pitch.

- **Plugging direction parallel (90°), straight 180° or angled (135°) to PCB**
- **Housing variants: closed side (G), screw flange (F), solder flange (LF) or snap-on solder flange (RF)**
- **Optimised for the SMT process**
- **Pin length 3.2 mm universal for all soldering methods**
- **Pin length 1.5 mm optimised for reflow soldering methods**
- **Packed either in a box (BX) or tape-on-reel (RL)**
- **Male header can be coded**

General ordering data

Type	SL-SMT 3.50/23/90LF 1.5 ...	Version	Product data	Packaging
Order No.	1805150000	PCB plug-in connector, male header, Solder flange, THT/THR solder	IEC: 320 V / 15 A	Box
GTIN (EAN)	4032248269051	connection, 3.50 mm, Number of poles: 23, 90°, Solder pin length (l):	UL: 300 V / 10 A	
Qty.	20 pc(s).	1.5 mm, tinned, black, Box		
Type	SL-SMT 3.50/23/90LF 3.2 ...	Version	Product data	Packaging
Order No.	1842060000	PCB plug-in connector, male header, Solder flange, THT/THR solder	IEC: 320 V / 15 A	Box
GTIN (EAN)	4032248353415	connection, 3.50 mm, Number of poles: 23, 90°, Solder pin length (l):	UL: 300 V / 10 A	
Qty.	18 pc(s).	3.2 mm, tinned, black, Box		

SL-SMT 3.5/180LF Box

High-temperature-resistant male header, 3.50 mm pitch.

- **Plugging direction parallel (90°), straight 180° or angled (135°) to PCB**
- **Housing variants: closed side (G), screw flange (F), solder flange (LF) or snap-on solder flange (RF)**
- **Optimised for the SMT process**
- **Pin length 3.2 mm universal for all soldering methods**
- **Pin length 1.5 mm optimised for reflow soldering methods**
- **Packed either in a box (BX) or tape-on-reel (RL)**
- **Male header can be coded**

General ordering data

Type	SL-SMT 3.50/23/180LF 1. ...	Version	Product data	Packaging
Order No.	1804920000	PCB plug-in connector, male header, Solder flange, THT/THR solder	IEC: 320 V / 15 A	Box
GTIN (EAN)	4032248268689	connection, 3.50 mm, Number of poles: 23, 180°, Solder pin length	UL: 300 V / 10 A	
Qty.	20 pc(s).	(l): 1.5 mm, tinned, black, Box		

OMNIMATE Signal - series BL/SL 3.50
BL 3.50/23/180F SN BK BX

Weidmüller Interface GmbH & Co. KG
Klingenbergstraße 26
D-32758 Detmold
Germany
Fon: +49 5231 14-0
Fax: +49 5231 14-292083
www.weidmueller.com

Mating connector (fully pluggable)

Type	SL-SMT 3.50/23/180LF 3. ...	Version	Product data	Packaging
Order No.	1842750000	PCB plug-in connector, male header, Solder flange, THT/THR solder connection, 3.50 mm, Number of poles: 23, 180°, Solder pin length (l): 3.2 mm, tinned, black, Box	IEC: 320 V / 15 A UL: 300 V / 10 A	Box
GTIN (EAN)	4032248354115			
Qty.	18 pc(s).			

SL 3.50/90F

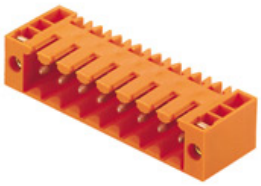

Pin headers for wave soldering in 3.50 mm pitch

- Plugging direction is parallel (90°), straight 180° or angled (135°) to the PCB
- Housing variant: screw flange (F)
- Packed in a cardboard box (BX)
- Pin header can be coded

General ordering data

Type	SL 3.50/23/90F 3.2SN GY ...	Version	Product data	Packaging
Order No.	1620060000	PCB plug-in connector, male header, Flange, THT solder connection, 3.50 mm, Number of poles: 23, 90°, Solder pin length (l): 3.2 mm, tinned, Pebble grey, Box	IEC: / 17 A UL: 300 V / 10 A	Box
GTIN (EAN)	4008190151072			
Qty.	20 pc(s).			
Type	SL 3.50/23/90F 4.5SN BK ...	Version	Product data	Packaging
Order No.	1618340000	PCB plug-in connector, male header, Flange, THT solder connection, 3.50 mm, Number of poles: 23, 90°, Solder pin length (l): 4.5 mm, tinned, black, Box	IEC: / 17 A UL: 300 V / 10 A	Box
GTIN (EAN)	4008190120689			
Qty.	20 pc(s).			
Type	SL 3.50/23/90F 3.2SN OR ...	Version	Product data	Packaging
Order No.	1619830000	PCB plug-in connector, male header, Flange, THT solder connection, 3.50 mm, Number of poles: 23, 90°, Solder pin length (l): 3.2 mm, tinned, orange, Box	IEC: / 17 A UL: 300 V / 10 A	Box
GTIN (EAN)	4008190147617			
Qty.	20 pc(s).			
Type	SL 3.50/23/90F 4.5SN OR ...	Version	Product data	Packaging
Order No.	1618260000	PCB plug-in connector, male header, Flange, THT solder connection, 3.50 mm, Number of poles: 23, 90°, Solder pin length (l): 4.5 mm, tinned, orange, Box	IEC: / 17 A UL: 300 V / 10 A	Box
GTIN (EAN)	4008190119096			
Qty.	20 pc(s).			
Type	SL 3.50/23/90F 3.2SN DK ...	Version	Product data	Packaging
Order No.	1620270000	PCB plug-in connector, male header, Flange, THT solder connection, 3.50 mm, Number of poles: 23, 90°, Solder pin length (l): 3.2 mm, tinned, Signal green, Box	IEC: / 17 A UL: 300 V / 10 A	Box
GTIN (EAN)	4008190153984			
Qty.	20 pc(s).			

OMNIMATE Signal - series BL/SL 3.50
BL 3.50/23/180F SN BK BX

Weidmüller Interface GmbH & Co. KG
Klingenbergstraße 26
D-32758 Detmold
Germany
Fon: +49 5231 14-0
Fax: +49 5231 14-292083
www.weidmueller.com

Mating connector (fully pluggable)

SL-SMT 3.5/90F Box

High-temperature-resistant male header, 3.50 mm pitch.

- **Plugging direction parallel (90°), straight 180° or angled (135°) to PCB**
- **Housing variants: closed side (G), screw flange (F), solder flange (LF) or snap-on solder flange (RF)**
- **Optimised for the SMT process**
- **Pin length 3.2 mm universal for all soldering methods**
- **Pin length 1.5 mm optimised for reflow soldering methods**
- **Packed either in a box (BX) or tape-on-reel (RL)**
- **Male header can be coded**

General ordering data

Type	SL-SMT 3.50/23/90F 3.2S ...	Version	Product data	Packaging
Order No.	1842290000	PCB plug-in connector, male header, Flange, THT/THR solder	IEC: 320 V / 15 A	Box
GTIN (EAN)	4032248353644	connection, 3.50 mm, Number of poles: 23, 90°, Solder pin length (l):	UL: 300 V / 10 A	
Qty.	18 pc(s).	3.2 mm, tinned, black, Box		

SL-SMT 3.5/180F Box

High-temperature-resistant male header, 3.50 mm pitch.

- **Plugging direction parallel (90°), straight 180° or angled (135°) to PCB**
- **Housing variants: closed side (G), screw flange (F), solder flange (LF) or snap-on solder flange (RF)**
- **Optimised for the SMT process**
- **Pin length 3.2 mm universal for all soldering methods**
- **Pin length 1.5 mm optimised for reflow soldering methods**
- **Packed either in a box (BX) or tape-on-reel (RL)**
- **Male header can be coded**

General ordering data

Type	SL-SMT 3.50/23/180F 3.2 ...	Version	Product data	Packaging
Order No.	1842980000	PCB plug-in connector, male header, Flange, THT/THR solder	IEC: 320 V / 15 A	Box
GTIN (EAN)	4032248354443	connection, 3.50 mm, Number of poles: 23, 180°, Solder pin length	UL: 300 V / 10 A	
Qty.	18 pc(s).	(l): 3.2 mm, tinned, black, Box		

OMNIMATE Signal - series BL/SL 3.50
BL 3.50/23/180F SN BK BX

Weidmüller Interface GmbH & Co. KG
Klingenbergstraße 26
D-32758 Detmold
Germany
Fon: +49 5231 14-0
Fax: +49 5231 14-292083
www.weidmueller.com

Mating connector (fully pluggable)

SL 3.50/180F

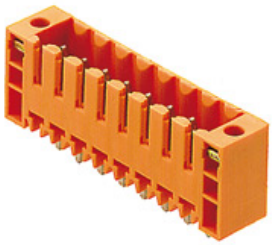

Pin headers for wave soldering in 3.50 mm pitch

- Plugging direction is parallel (90°), straight 180° or angled (135°) to the PCB
- Housing variant: screw flange (F)
- Packed in a cardboard box (BX)
- Pin header can be coded

General ordering data

Type	SL 3.50/23/180F 3.2SN G ...	Version	Product data	Packaging
Order No.	1622470000	PCB plug-in connector, male header, Flange, THT solder connection,	IEC: 320 V / 17 A	Box
GTIN (EAN)	4008190193133	3.50 mm, Number of poles: 23, 180°, Solder pin length (l): 3.2 mm,	UL: 300 V / 10 A	
Qty.	20 pc(s).	tinned, Pebble grey, Box		
Type	SL 3.50/23/180F 3.2SN D ...	Version	Product data	Packaging
Order No.	1622690000	PCB plug-in connector, male header, Flange, THT solder connection,	IEC: 320 V / 17 A	Box
GTIN (EAN)	4008190193355	3.50 mm, Number of poles: 23, 180°, Solder pin length (l): 3.2 mm,	UL: 300 V / 10 A	
Qty.	20 pc(s).	tinned, Signal green, Box		
Type	SL 3.50/23/180F 3.2SN O ...	Version	Product data	Packaging
Order No.	1622240000	PCB plug-in connector, male header, Flange, THT solder connection,	IEC: 320 V / 17 A	Box
GTIN (EAN)	4008190189440	3.50 mm, Number of poles: 23, 180°, Solder pin length (l): 3.2 mm,	UL: 300 V / 10 A	
Qty.	20 pc(s).	tinned, orange, Box		
Type	SL 3.50/23/180F 4.5SN O ...	Version	Product data	Packaging
Order No.	1618890000	PCB plug-in connector, male header, Flange, THT solder connection,	IEC: 320 V / 17 A	Box
GTIN (EAN)	4008190129569	3.50 mm, Number of poles: 23, 180°, Solder pin length (l): 4.5 mm,	UL: 300 V / 10 A	
Qty.	20 pc(s).	tinned, orange, Box		
Type	SL 3.50/23/180F 4.5SN B ...	Version	Product data	Packaging
Order No.	1618970000	PCB plug-in connector, male header, Flange, THT solder connection,	IEC: 320 V / 17 A	Box
GTIN (EAN)	4008190131128	3.50 mm, Number of poles: 23, 180°, Solder pin length (l): 4.5 mm,	UL: 300 V / 10 A	
Qty.	20 pc(s).	tinned, black, Box		

OMNIMATE Signal - series BL/SL 3.50
BL 3.50/23/180F SN BK BX

Weidmüller Interface GmbH & Co. KG
Klingenbergstraße 26
D-32758 Detmold
Germany
Fon: +49 5231 14-0
Fax: +49 5231 14-292083
www.weidmueller.com

Accessories

Strain reliefs

For frequent load changes: the "trailer coupling" for plug-in connectors.
The strain relief can do more than just relieve the strain on conductors:
Simply clip onto the plug and
- bundle conductors
- guide cables
- use as a connection and disconnection aid

No damage to the connecting points, clear, tidy wiring and easy to handle.
User advantages: permanent heavy-duty connections for harsh industrial environments and convenient operation ensure improved system availability.

General ordering data

Type	BL 3.50 ZE08 OR BX	Version	Product data	Packaging
Order No.	1629690000	PCB plug-in connector, Accessories, Strain relief, orange, Number of poles: 8		Box
GTIN (EAN)	4008190202583			
Qty.	50 pc(s).			
Type	BL 3.50 ZE03 BK BX	Version	Product data	Packaging
Order No.	1627820000	PCB plug-in connector, Accessories, Strain relief, black, Number of poles: 3		Box
GTIN (EAN)	4008190202552			
Qty.	50 pc(s).			
Type	BL 3.50 ZE03 OR BX	Version	Product data	Packaging
Order No.	1629680000	PCB plug-in connector, Accessories, Strain relief, orange, Number of poles: 3		Box
GTIN (EAN)	4008190202569			
Qty.	50 pc(s).			
Type	BL 3.50 ZE08 BK BX	Version	Product data	Packaging
Order No.	1627830000	PCB plug-in connector, Accessories, Strain relief, black, Number of poles: 8		Box
GTIN (EAN)	4008190202576			
Qty.	50 pc(s).			

OMNIMATE Signal - series BL/SL 3.50
BL 3.50/23/180F SN BK BX

Weidmüller Interface GmbH & Co. KG
Klingenbergstraße 26
D-32758 Detmold
Germany
Fon: +49 5231 14-0
Fax: +49 5231 14-292083
www.weidmueller.com

Accessories

Coding elements

Only connects what is supposed to be connected: the right connection at the right place.
Coding elements and locking devices clearly assign connecting elements during the manufacturing process and operation
The coding elements and locking devices are inserted prior to assembly or during the cable assembly phase.
The Weidmüller alternative: configure online using the variant configurator to precode prior to delivery.
Incorrect assembly on the circuit board and incorrect plugging of connecting elements is no longer possible.
The advantage: no troubleshooting during manufacture and no operational errors by the user.

General ordering data

Type	BL SL 3.5 KO OR	Version	Product data	Packaging
Order No.	1693430000	PCB plug-in connector, Accessories, Coding element, orange, Number of poles: 1		Box
GTIN (EAN)	4008190867447			
Qty.	100 pc(s).			
Type	BL SL 3.5 KO SW	Version	Product data	Packaging
Order No.	1610100000	PCB plug-in connector, Accessories, Coding element, black, Number of poles: 1		Box
GTIN (EAN)	4008190187637			
Qty.	100 pc(s).			

BL 3.50/04/180F

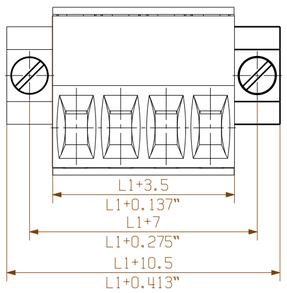

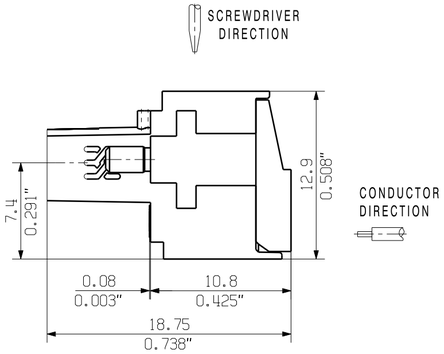

M 1/1

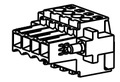

BL 3.50/04/180LH

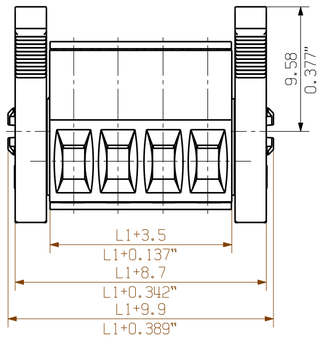

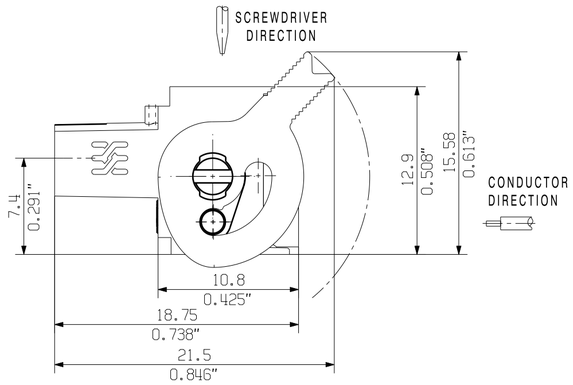

M 1/1

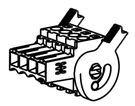

BL 3.50/04/180LR

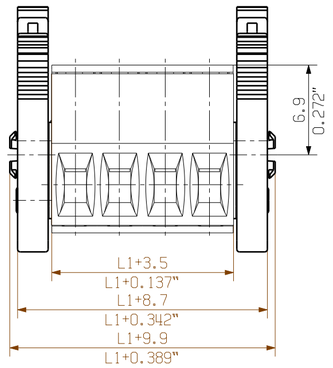

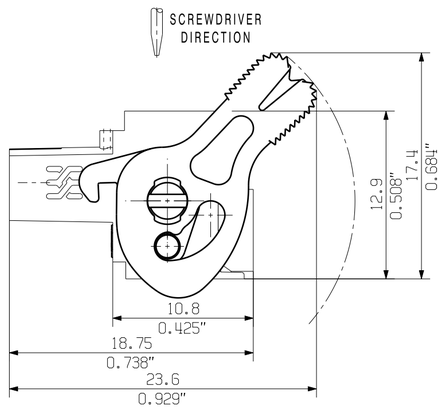

M 1/1

BL 3.50/04/180LR REDESIGN

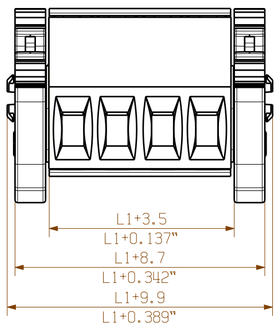

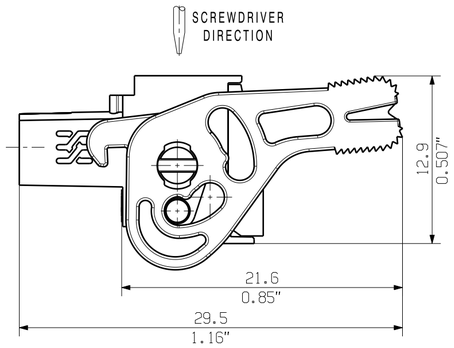

M 1/1

BL 3.50/04/180

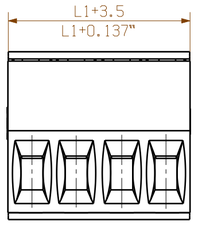

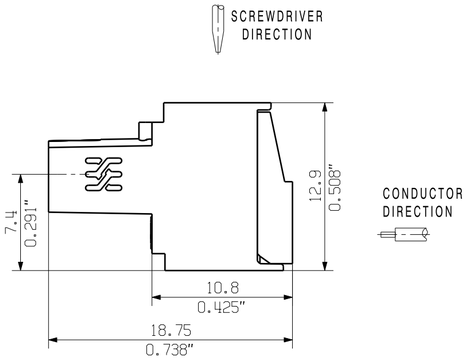

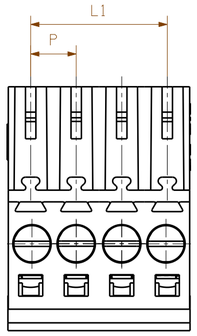

M 1/1

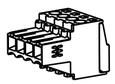

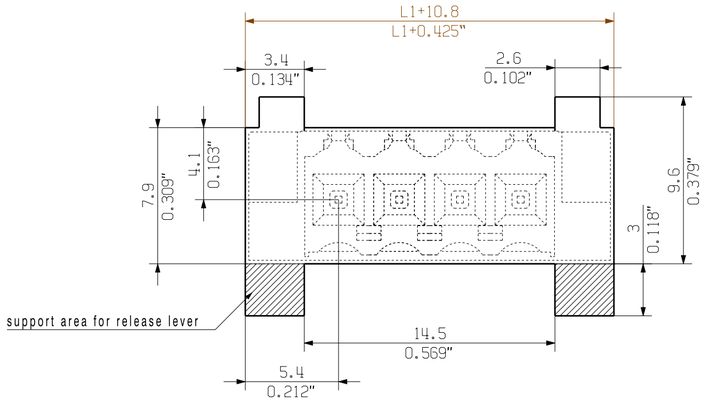

MIN. FRONT PLATE CUT-OUT

P = 3.50 RASTER PITCH

For the mounting of PCBs, it should be noted that the rated data given in the catalogue relates only to the connection elements. The neccessary creepage and clearance paths must be observed in connection with the respective applicant in accordance to VDE 0110. The current-carrying capacity and pitch tolerance is to be determined according to DIN IEC 326 part 3 very fine.

Weidmüller connectors are tested to the DIN VDE 0627 standard, and are valid for its field of application. Provided that the connectors are used to the intended purpose, all requirements with respect to the occuring of electrical, mechanical, thermic and corrosive stress will be satisfied.

n POLZAHL POLES	L1 [mm]	L1 [inch]
24	80.5	3.169
23	77.0	3.032
22	73.5	2.894
21	70.0	2.756
20	66.5	2.618
19	63.0	2.480
18	59.5	2.343
17	56.0	2.205
16	52.5	2.067
15	49.0	1.929
14	45.5	1.791
13	42.0	1.654
12	38.5	1.516
11	35.0	1.378
10	31.5	1.240
9	28.0	1.102
8	24.5	0.965
7	21.0	0.827
6	17.5	0.689
5	14.0	0.551
4	10.5	0.413
3	7.0	0.276
2	3.5	0.138

ALLGEMEINGUELTIGE KUNDENZEICHNUNG, AKTUELLER STAND NUR AUF ANFRAGE
GENERAL CUSTOMER DRAWING, TOPICAL VERSION ONLY IF REQUIRED

GENERAL TOLERANCE: DIN ISO 2768-m

RoHS COMPLIANT

103300/5 17.05.18 HELIS_MA 01

Modification

	Date	Name
Drawn	02.09.2008	HELIS_MA
Responsible		AMANN_A
Checked		
Approved		LANG_T

Scale: 5/1

Supersedes: .

Cat.no.: .

Weidmüller

Drawing no. 3 19675 Issue no. 36

Sheet 00 of 00 sheets

BL 3.50/../180

BUCHSENSTECKER
FEMALE PLUG

Pruefung / Verification

Product file: BL 3.50

7382

The reproduction, distribution and utilization of this document as well as the communication of its contents to others without explicit authorization is prohibited.
Offenders will be held liable for the payment of damages. Weidmueller exclusively reserves the right to file for patents, utility models or designs.
© Weidmueller Interface GmbH & Co. KG