Klippon Control Station (control and signalling device)
KLIPPON CS POK 121209-4

Weidmüller Interface GmbH & Co. KG
Klingenbergstraße 26
D-32758 Detmold
Germany
Fon: +49 5231 14-0
Fax: +49 5231 14-292083
www.weidmueller.com

On-site control with Ex-certified Klippon® Control Station: small command and signalling devices
Approved operating and display elements in stainless steel, aluminium or polyester enclosures.
You want to control and safeguard your work processes in hazardous areas. For on-site control - approved Klippon® enclosure solutions with control and display elements. Let's connect.

General ordering data

Type	KLIPPON CS POK 121209-4
Order No.	1537130000
Version	Klippon Control Station (control and signalling device), Control / signalling device, KLIPPON POK 121209 EX, Glass-fibre reinforced polyester with graphite mixture, Light module - red, EMERGENCY-STOP pushbutton with yellow, contrasting label, 2 NC contact, positive opening contacts, -55 °C... +55 °C, IP54, IP66
GTIN (EAN)	4050118340976
Qty.	1 pc(s).
Cable gland	2721990000
Reference product	1306050000

Creation date May 4, 2020 1:21:29 AM CEST

Klippon Control Station (control and signalling device)
KLIPPON CS POK 121209-4

Weidmüller Interface GmbH & Co. KG
Klingenbergstraße 26
D-32758 Detmold
Germany
Fon: +49 5231 14-0
Fax: +49 5231 14-292083
www.weidmueller.com

Technical data

Dimensions and weights

Width	120 mm	Width (inches)	4.724 inch
Height	122 mm	Height (inches)	4.803 inch
Height of lowest version	90 mm	Depth	90 mm
Depth (inches)	3.543 inch	Mounting dimension - width	106 mm
Mounting dimension - height	82 mm	Net weight	1,100 g
Depth with add-on components	128 mm		

Certificate numbers enclosure

Certificate no. assembled enclosure (ATEX)	TÜV 14 ATEX 7606 X	Certificate no. assembled enclosure (IECEx)	IECEx ITA 14.0013X
Certificate No. (MARITREG)	15.40082.250		

General information

1 Position in enclosure	Light module - red	2 Position in enclosure	EMERGENCY-STOP pushbutton with yellow, contrasting label
Contact design	2 NC contact, positive opening contacts	Operating voltage, max.	250 V
Operating current at 40°C ambient temperature, max.	1.5 mm² - T6 10 A, 1.5 mm² - T5 16 A, 2.5 mm² - T6 16 A	Operating current at 55°C ambient temperature, max.	1.5 mm² - T4 16 A, 1.5 mm² - T5 10 A, 2.5 mm² - T5 16 A
Actuators	EMERGENCY STOP pushbutton	Actuator colour	red
Drill holes side B	1 x M25	UL 94 flammability rating	V-0
Lid attachment	Crosshead screws, stainless steel	Seal material of operating and display elements	EPDM
Enclosure seal material	Silicone (VMQ)	Torque for lid screws	2.5 Nm
External earth	Available on request	Marking	II 2 G Ex d e IIC T* Gb, II 2 D Ex tb IIIC T*°C Db
Cable gland clamping area, max.	17 mm	Cable gland clamping area, min.	12 mm
Wire connection cross section, finely stranded, max.	2.5 mm²	Illumination module colour	red
Type of mounting	Wall mounting	Surface finish	untreated
Impact resistance	4 joules in acc. with IEC 60079-0	Temperature class	T4, T5, T6
Material	Glass-fibre reinforced polyester with graphite mixture		

Housing

Drill holes side B	1 x M25	Material	Glass-fibre reinforced polyester with graphite mixture

Classifications

ETIM 6.0	EC002503	ETIM 7.0	EC002503
eClass 9.0	27-18-05-02	eClass 9.1	27-18-05-90
eClass 10.0	27-18-05-02		

Klippon Control Station (control and signalling device)
KLIPPON CS POK 121209-4

Weidmüller Interface GmbH & Co. KG
Klingenbergstraße 26
D-32758 Detmold
Germany
Fon: +49 5231 14-0
Fax: +49 5231 14-292083
www.weidmueller.com

Technical data

Approvals

Approvals	EAC, ATEX

Downloads

Brochure/Catalogue	CAT 5 ENCL 17/18 EN PI KLIPPON CS EN
Engineering Data	EPLAN, WSCAD

Klippon Control Station (control and signalling device)
KLIPPON CS POK 121209-4

Weidmüller Interface GmbH & Co. KG
Klingenbergstraße 26
D-32758 Detmold
Germany
Fon: +49 5231 14-0
Fax: +49 5231 14-292083
www.weidmueller.com

Drawings

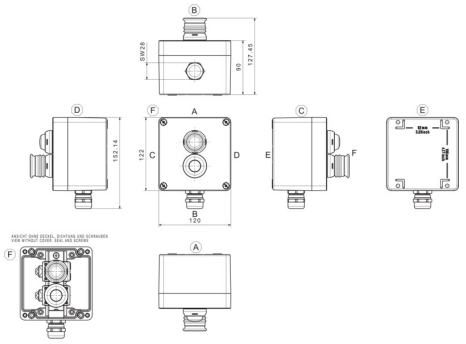

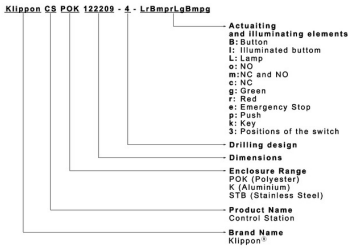

Klippon Control Station (control and signalling device)
KLIPPON CS POK 121209-4

Weidmüller Interface GmbH & Co. KG
Klingenbergstraße 26
D-32758 Detmold
Germany
Fon: +49 5231 14-0
Fax: +49 5231 14-292083
www.weidmueller.com

Accessories

Klippon® POK mounting feet

Mounting feet for Klippon® POK enclosure

Rear-wall mounting directly onto the wall is possible with the aid of fixing holes.
The mounting feet make it easy to mount the enclosure from outside without having to open the cover.
The mounting feet are available as accessories in two versions.

General ordering data

Type	MF POK BIG	Version
Order No.	9510910000	Klippon POK (polyester empty enclosure), Mounting foot, Fixing lugs,
GTIN (EAN)	4032248009756	Material: Stainless steel 1.4301, Miscellaneous
Qty.	1 pc(s).	

Klippon POK (polyester empty enclosure)
KLIPPON POK 121209 EX

Weidmüller Interface GmbH & Co. KG
Klingenbergstraße 26
D-32758 Detmold
Germany
Fon: +49 5231 14-0
Fax: +49 5231 14-292083
www.weidmueller.com

Klippon® POK – polyester enclosure
The glass-fibre reinforced polyester enclosures of the Klippon® POK range offer a high-quality solution for protecting electrical components. These enclosures are ideal wherever corrosion resistance, shock resistance and a high degree of protection are required.
Features:

- glass-fibre reinforced polyester
- 17 sizes
- Two standard colours: grey (similar to RAL 7001) and black (similar to RAL 9011)
- Cover with stainless steel screws in cross-head / slotted design
- Moulded gasket made of silicone or chloroprene
- Fixing holes outside the sealed area
- Mounting directly in the enclosure or using an internal mounting plate
- Direct wall mounting possible using fixing holes or mounting feet
- Fastening thread to attach mounting rails and plates
- Weidmüller can manufacture and supply this enclosure to match customer specifications - fitted with all necessary terminals and cable glands.

General ordering data

Type	KLIPPON POK 121209 EX
Order No.	1306050000
Version	Klippon POK (polyester empty enclosure), Empty enclosure, Height: 120 mm, Width: 122 mm, Depth: 90 mm, Material: Glass fibre-reinforced polyester, untreated, polished, black
GTIN (EAN)	4050118108378
Qty.	1 pc(s).
Required tool	9008540000

Klippon POK (polyester empty enclosure)
KLIPPON POK 121209 EX

Weidmüller Interface GmbH & Co. KG
Klingenbergstraße 26
D-32758 Detmold
Germany
Fon: +49 5231 14-0
Fax: +49 5231 14-292083
www.weidmueller.com

Technical data

Dimensions and weights

Width	122 mm	Width (inches)	4.803 inch
Height	120 mm	Height (inches)	4.724 inch
Height of lowest version	90 mm	Depth	90 mm
Depth (inches)	3.543 inch	Mounting dimension - width	106 mm
Mounting dimension - height	82 mm	Net weight	769 g

Cable glands, left

M12	8	M16	4
M20	3	M25	1
M32	1		

Cable glands, right

M12	8	M16	4
M20	3	M25	1
M32	1		

Cable glands, top/bottom

M12	12	M16	6
M20	4	M25	2
M32	1		

Certificate numbers enclosure

Certificate no. empty enclosure (ATEX)	IBExU13ATEX1030 U	Certificate no. empty enclosure (IECEx)	IECEx IBE 13.0003U
Certificate no., assembled enclosure (EAC)	RU C-DE.ГБ08.В.01328	Certificate no., empty enclosure (EAC)	RU C-DE.ГБ08.В.00472
Certificate no. assembled enclosure (AEx)	E223792	Certificate no. empty enclosure (AEx)	E223792
Certificate no., assembled enclosure (KOSHA)	16-AV4BO-0246X	Certificate No. (GERMLLOYD)	TAE00002R2
Certificate No. (MARITREG)	19.00109.272	Certificate no. (cULus)	E256877

General information

Areas of use	Explosive risk zone, Harbour facilities, Machine construction, Process industry, Transportation	Installation advice	Direct mounting, Mounting straps
Material thickness	4.39 mm	Material thickness of cover	4.4 mm
Material thickness of enclosure	4.39 mm	Standards	DIN EN 62208 - Empty enclosure standard, IEC 60079-0, IEC 60079-7, IEC 60079-31
Torque for lid screws	2.5 Nm	UL 94 flammability rating	V-0
Material	Glass fibre-reinforced polyester	Seal material	Silicone
Surface finish	untreated, polished	Operating temperature, min.	-55 °C
Operating temperature, max.	100 °C	Impact resistance	7 J ATEX version
Protection degree	IP66	Enclosure attachment	Installation through the housing rear wall, Fixing lugs
Lid attachment	Slotted/Phillips screws		

Klippon POK (polyester empty enclosure)
KLIPPON POK 121209 EX

Weidmüller Interface GmbH & Co. KG
Klingenbergstraße 26
D-32758 Detmold
Germany
Fon: +49 5231 14-0
Fax: +49 5231 14-292083
www.weidmueller.com

Technical data

General information on accessories

Material	Glass fibre-reinforced polyester	Material thickness	4.39 mm
Mounting dimension - height	82 mm	Mounting dimension - width	106 mm
Surface finish	untreated, polished		

horizontal assembly

WDU 10 / ZDU 10	1x6	WDU 16 / ZDU 16	1x5
WDU 2,5 / ZDU 2,5 / IDU 2,5	1x12	WDU 4 / ZDU 4	1x10
WDU 6 / ZDU 6	1x7		

vertical assembly

WDU 2,5 / ZDU 2,5 / IDU 2,5	*	WDU 4 / ZDU 4	*

Classifications

ETIM 6.0	EC002503	ETIM 7.0	EC002503
eClass 9.0	27-18-05-02	eClass 9.1	27-18-05-02
eClass 10.0	27-18-05-02		

Approvals

Approvals	ATEX - SIRA, IECEx - IBExU
ROHS	Conform

Downloads

Approval/Certificate/Document of Conformity	Attestation of Conformity - Klippon POK Empty Enclosures - AoC DE PS2600 160308 001ISS01 EU Declaration of Conformity - Klippon POK Empty Enclosures Ex - DoC DE PS2600 160412 001ISS01
Brochure/Catalogue	MB OVERV. PROCESS WD DE MB KLIPPON ENCL.TECN EN MB PROCESS EN CAT 5 ENCL 17/18 EN FL KLIPPON POK EN FL SHIPBUILDING 2016 EN
Engineering Data	EPLAN, WSCAD
Engineering Data	STEP
Tender specification	Klippon POK 121209 Ex_1306050000_DE Klippon POK 121209 Ex_1306050000_EN
User Documentation	MB KLIPPON ENCL.TECN DE Assembly guidelines - empty enclosures

Klippon POK (polyester empty enclosure)
KLIPPON POK 121209 EX

Weidmüller Interface GmbH & Co. KG
Klingenbergstraße 26
D-32758 Detmold
Germany
Fon: +49 5231 14-0
Fax: +49 5231 14-292083
www.weidmueller.com

Drawings

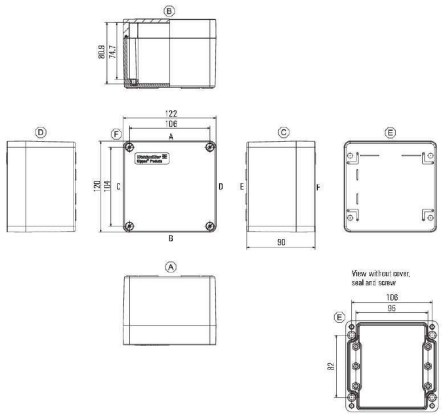

Klippon POK (polyester empty enclosure)
KLIPPON POK 121209 EX

Weidmüller Interface GmbH & Co. KG
Klingenbergstraße 26
D-32758 Detmold
Germany
Fon: +49 5231 14-0
Fax: +49 5231 14-292083
www.weidmueller.com

Accessories

TS 15

Integrate, expand and customise - the perfect supplement to every application

The consistent structure of system accessories for the Klippon® POK enclosure range allows you to easily adapt the enclosure to meet the specific requirements of every application.
The range includes:

- Mounting plates
- Earthing plates
- Mounting feet

Our assembly service includes the delivery of the enclosure ready to be connected and suitable for every application.

General ordering data

Type	TS15X5 ST POK 0811	Version
Order No.	8000003890	Rail, TS 15, Length: 98 mm, without slot, Steel, galvanized, chromium-
GTIN (EAN)	4050118652550	plated
Qty.	20 pc(s).	

Klippon® POK installation material

Integrate, expand and customise - the perfect supplement to every application

The consistent structure of system accessories for the Klippon® POK enclosure range allows you to easily adapt the enclosure to meet the specific requirements of every application.
The range includes:

- Mounting plates
- Earthing plates
- Mounting feet

Our assembly service includes the delivery of the enclosure ready to be connected and suitable for every application.

General ordering data

Type	SD FIXING SET POK	Version
Order No.	1463490000	Klippon POK (polyester empty enclosure), Identification plate fixing set
GTIN (EAN)	4050118299878	
Qty.	1 pc(s).	

Klippon POK (polyester empty enclosure)
KLIPPON POK 121209 EX

Weidmüller Interface GmbH & Co. KG
Klingenbergstraße 26
D-32758 Detmold
Germany
Fon: +49 5231 14-0
Fax: +49 5231 14-292083
www.weidmueller.com

Accessories

Type	TPSD FIXING SET POK	Version
Order No.	1435840000	Klippon POK (polyester empty enclosure), Type plate fixings set,
GTIN (EAN)	4050118240771	Material: Stainless steel, rust-proof, untreated
Qty.	1 pc(s).	

Klippon® POK mounting plates

Mounting plates for Klippon® POK enclosures
Mounting plates made out of 2 mm sheet steel, for longitudinal and transverse mounting of DIN rails, or for mounting components directly onto the mounting plate.

General ordering data

Type	POK MOPL 1212	Version
Order No.	9510590000	Klippon POK (polyester empty enclosure), Mounting plate, Height:
GTIN (EAN)	4008190498221	107 mm, Width: 109 mm, Depth: 1.5 mm, Material: Sheet steel,
Qty.	1 pc(s).	galvanized, Miscellaneous, silver

Klippon® POK earthing stud

Integrate, expand and customise - the perfect supplement to every application

The consistent structure of system accessories for the Klippon® POK enclosure range allows you to easily adapt the enclosure to meet the specific requirements of every application.
The range includes:

- Mounting plates
- Earthing plates
- Mounting feet

Our assembly service includes the delivery of the enclosure ready to be connected and suitable for every application.

General ordering data

Type	PEBZ M10 S4 SET	Version
Order No.	1283440000	Klippon POK (polyester empty enclosure), Earthing stud,
GTIN (EAN)	4050118073362	Miscellaneous, Material: Stainless steel 1.4404 (316L)
Qty.	1 pc(s).	
Type	PEBZ M6 BR SET	Version
Order No.	1277250000	Klippon POK (polyester empty enclosure), Earthing stud,
GTIN (EAN)	4050118067149	Miscellaneous, Material: Brass
Qty.	1 pc(s).	

Klippon POK (polyester empty enclosure)
KLIPPON POK 121209 EX

Weidmüller Interface GmbH & Co. KG
Klingenbergstraße 26
D-32758 Detmold
Germany
Fon: +49 5231 14-0
Fax: +49 5231 14-292083
www.weidmueller.com

Accessories

Type	PEBZ M6 S4 SET	Version
Order No.	1283430000	Klippon POK (polyester empty enclosure), Earthing stud,
GTIN (EAN)	4050118073607	Miscellaneous, Material: Stainless steel 1.4404 (316L)
Qty.	1 pc(s).	

Type	PEBZ M10 BR SET	Version
Order No.	1277220000	Klippon POK (polyester empty enclosure), Earthing stud,
GTIN (EAN)	4050118067019	Miscellaneous, Material: Brass
Qty.	1 pc(s).	

TS 35

Integrate, expand and customise - the perfect supplement to every application

The consistent structure of system accessories for the Klippon® POK enclosure range allows you to easily adapt the enclosure to meet the specific requirements of every application.
The range includes:

- Mounting plates
- Earthing plates
- Mounting feet

Our assembly service includes the delivery of the enclosure ready to be connected and suitable for every application.

General ordering data

Type	TS35X7.5 ST POK 1212	Version
Order No.	8000037566	Terminal rails, Rail, Material: Steel
GTIN (EAN)	4050118681727	
Qty.	20 pc(s).	

Klippon POK (polyester empty enclosure)
KLIPPON POK 121209 EX

Weidmüller Interface GmbH & Co. KG
Klingenbergstraße 26
D-32758 Detmold
Germany
Fon: +49 5231 14-0
Fax: +49 5231 14-292083
www.weidmueller.com

Accessories

Spacer

Integrate, expand and customise - the perfect supplement to every application
The fully structured range of system accessories for the new Klippon® TB enclosure series allows you to easily adapt the enclosures to meet the specific requirements of every application.
The following options are available:
- Document holders
- Flange plates
- Mounting plates
- Locking systems
- Type label holders
- Rain hoods
- Earthing studs

General ordering data

Type	SP M6 30 S2	Version
Order No.	0935140000	Klippon TB (Terminal Box), Spacer
GTIN (EAN)	4032248699117	
Qty.	4 pc(s).	
Type	SP M6 20 S2	Version
Order No.	0935130000	Klippon TB (Terminal Box), Spacer
GTIN (EAN)	4032248699001	
Qty.	4 pc(s).	
Type	SP M6 15 S2	Version
Order No.	0935120000	Klippon TB (Terminal Box), Spacer
GTIN (EAN)	4032248699056	
Qty.	4 pc(s).	
Type	SP M6 10 S2	Version
Order No.	0935110000	Klippon TB (Terminal Box), Spacer
GTIN (EAN)	4032248699049	
Qty.	4 pc(s).	

Klippon POK (polyester empty enclosure)
KLIPPON POK 121209 EX

Weidmüller Interface GmbH & Co. KG
Klingenbergstraße 26
D-32758 Detmold
Germany
Fon: +49 5231 14-0
Fax: +49 5231 14-292083
www.weidmueller.com

Accessories

Klippon® POK mounting plates for applications with earthing plates

Integrate, expand and customise - the perfect supplement to every application

The consistent structure of system accessories for the Klippon® POK enclosure range allows you to easily adapt the enclosure to meet the specific requirements of every application.
The range includes:

- Mounting plates
- Earthing plates
- Mounting feet

Our assembly service includes the delivery of the enclosure ready to be connected and suitable for every application.

General ordering data

Type	POK MOPL 1212 MINI	Version
Order No.	1534340000	Klippon POK (polyester empty enclosure), Mounting plate, Height:
GTIN (EAN)	4050118338218	77 mm, Width: 109 mm, Depth: 1.5 mm, Material: Sheet steel,
Qty.	1 pc(s).	galvanized, galvanized, silver

Klippon® POK earthing plates

Brass earthing plates (Earth Continuity Plate) for the Klippon® POK enclosure
In order to provide internal earthing (especially for the Ex version) earth continuity plates in an angled design are available for the Klippon® POK enclosure.
These internal earth continuity plates are for the usage of metal glands and the design of EMC applications; they offer enhanced protection and are available separately.

General ordering data

Type	KLIPPON COPL 121209	Version
Order No.	1390970000	Klippon POK (polyester empty enclosure), Earthing plate, Width: 57.5
GTIN (EAN)	4050118191127	mm, Material: Brass, polished, untreated
Qty.	1 pc(s).	

Klippon POK (polyester empty enclosure)
KLIPPON POK 121209 EX

Weidmüller Interface GmbH & Co. KG
Klingenbergstraße 26
D-32758 Detmold
Germany
Fon: +49 5231 14-0
Fax: +49 5231 14-292083
www.weidmueller.com

Accessories

Klippon® POK mounting feet

Mounting feet for Klippon® POK enclosure

Rear-wall mounting directly onto the wall is possible with the aid of fixing holes.
The mounting feet make it easy to mount the enclosure from outside without having to open the cover.
The mounting feet are available as accessories in two versions.

General ordering data

Type	MF POK BIG	Version
Order No.	9510910000	Klippon POK (polyester empty enclosure), Mounting foot, Fixing lugs,
GTIN (EAN)	4032248009756	Material: Stainless steel 1.4301, Miscellaneous
Qty.	1 pc(s).	

Screwing

Klippon® Connect with clamping yoke Technology
The high reliability and variety of designs of the terminal blocks with clamping yoke connections make planning easer and optimises operational safety. Klippon® Connect provides a proven response to a range of different requirements.

General ordering data

Type	FKSC M5X8 D9/SW2.5	Version
Order No.	0295900000	SAK Series, Allen hex screw, Screws, Number of poles: 1
GTIN (EAN)	4008190133337	
Qty.	50 pc(s).	

Klippon POK (polyester empty enclosure)
KLIPPON POK 121209 EX

Weidmüller Interface GmbH & Co. KG
Klingenbergstraße 26
D-32758 Detmold
Germany
Fon: +49 5231 14-0
Fax: +49 5231 14-292083
www.weidmueller.com

Accessories

Spacer

For many years, the name Klippon® has stood for competence and quality in enclosures.
The Klippon® EBi industrial enclosure series protects your components reliably if they are used in moderate environmental conditions and is designed for everyday applications.
With the ever-increasing need for individual application solutions, the Klippon® EBi with its high degree of protection and impact resistance is ideally suited to your needs.
Our standard product is the Klippon® EBi QL – with hinged door and double-bit key lock.
A variant with mounting screws is also available, but is only manufactured on request and is subject to a minimum order quantity. DNV GL and cULus approvals are also available on request.

General ordering data

Type	SP M6 20 MSZN	Version
Order No.	3896200000	Klippon EBi (Essential Box industrial), Spacer, silver
GTIN (EAN)	4008190850234	
Qty.	2 pc(s).	
Type	SP M6 15 MSZN	Version
Order No.	3896100000	Klippon EBi (Essential Box industrial), Spacer, silver
GTIN (EAN)	4008190857851	
Qty.	2 pc(s).	
Type	SP M6 30 MSZN	Version
Order No.	3896300000	Klippon EBi (Essential Box industrial), Spacer, silver
GTIN (EAN)	4008190850241	
Qty.	2 pc(s).	

TS 35

The Klippon® brand has long stood for competence and quality in housings – particularly when turnkey, customer-specific solutions for standard industrial applications and applications in explosive risk zones are concerned.
Improved products that meet all application requirements: this was Weidmüller's aim when modernising and upgrading the Klippon® K enclosure series. No matter what kind of application the customer is planning; Weidmüller is able to provide a wide range of aluminium enclosures precisely fitting the customer's requirements.

General ordering data

Type	TS35X7.5 ST K41	Version
Order No.	8000003439	Rail, TS 35, TS 35 x 7.5, Length: 105 mm, without slot, Steel,
GTIN (EAN)	4050118652628	galvanized, chromium-plated
Qty.	20 pc(s).	