OMNIMATE Signal - series BL/SL 3.50
BL 3.50/03/180LR SN OR BX

Weidmüller Interface GmbH & Co. KG
Klingenbergstraße 26
D-32758 Detmold
Germany
Fon: +49 5231 14-0
Fax: +49 5231 14-292083
www.weidmueller.com

Product image

Similar to illustration

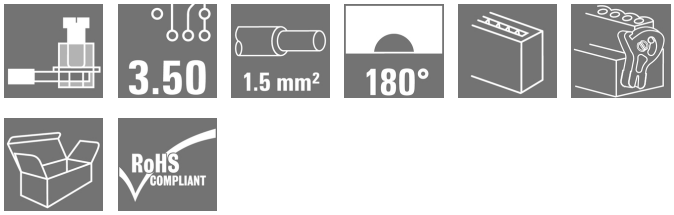

Female connectors with clamping yoke screw system for connecting conductors at 3.50 mm pitch. They provide space for labelling and can be coded.

General ordering data

Type	BL 3.50/03/180LR SN OR BX
Order No.	1531000000
Version	PCB plug-in connector, female plug, 3.50 mm, Number of poles: 3, 180°, Clamping yoke connection, Clamping range, max. : 1.5 mm², Box
GTIN (EAN)	4050118335965
Qty.	102 pc(s).
Product data	IEC: 320 V / 17 A / 0.2 - 1.5 mm² UL: 300 V / 10 A / AWG 28 - AWG 14
Packaging	Box

Creation date May 4, 2020 1:35:18 AM CEST

OMNIMATE Signal - series BL/SL 3.50
BL 3.50/03/180LR SN OR BX

Weidmüller Interface GmbH & Co. KG
Klingenbergstraße 26
D-32758 Detmold
Germany
Fon: +49 5231 14-0
Fax: +49 5231 14-292083
www.weidmueller.com

Technical data

Dimensions and weights

Width	17 mm	Width (inches)	0.669 inch
Height	14.9 mm	Height (inches)	0.587 inch
Depth	29.5 mm	Depth (inches)	1.161 inch
Net weight	3.524 g		

System Parameters

Product family	OMNIMATE Signal - series BL/SL 3.50	Type of connection	Field connection
Wire connection method	Clamping yoke connection	Pitch in mm (P)	3.5 mm
Pitch in inches (P)	0.138 inch	Conductor outlet direction	180°
Number of poles	3	L1 in mm	7 mm
L1 in inches	0.276 inch	Number of rows	1
Pin series quantity	1	Rated cross-section	1.5 mm²
Touch-safe protection acc. to DIN VDE 57 106	Safe from finger touch	Touch-safe protection acc. to DIN VDE 0470	IP 20
Volume resistance	≤ 5mΩ	Can be coded	Yes
Stripping length	6 mm	Tightening torque, min.	0.2 Nm
Tightening torque, max.	0.25 Nm	Clamping screw	M 2
Screwdriver blade	0.4 x 2.5	Screwdriver blade standard	DIN 5264
Plugging cycles	25	Plugging force/pole, max.	7 N
Pulling force/pole, max.	5 N		

Material data

Insulating material	PBT	Colour	orange
Colour chart (similar)	RAL 2000	Insulating material group	IIIa
Comparative Tracking Index (CTI)	≥ 200	Insulation strength	≥ 10^8 Ω
UL 94 flammability rating	V-0	GWFI	960 °C
Contact material	Copper alloy	Contact surface	tinned
Layer structure of plug contact	4-8 µm Sn hot-dip tinned	Storage temperature, min.	-25 °C
Storage temperature, max.	50 °C	Max. relative humidity during storage	70 %
Operating temperature, min.	-50 °C	Operating temperature, max.	100 °C
Temperature range, installation, min.	-30 °C	Temperature range, installation, max.	100 °C

Conductors suitable for connection

Clamping range, min.	0.08 mm²
Clamping range, max.	1.5 mm²
Wire connection cross section AWG, min.	AWG 28
Wire connection cross section AWG, max.	AWG 14
Solid, min. H05(07) V-U	0.2 mm²
Solid, max. H05(07) V-U	1.5 mm²
Flexible, min. H05(07) V-K	0.2 mm²
Flexible, max. H05(07) V-K	1.5 mm²
w. plastic collar ferrule, DIN 46228 pt 4, min.	0.2 mm²
w. plastic collar ferrule, DIN 46228 pt 4, max.	1.5 mm²
w. wire end ferrule, DIN 46228 pt 1, min.	0.2 mm²
w. wire end ferrule, DIN 46228 pt 1, max.	1.5 mm²

OMNIMATE Signal - series BL/SL 3.50
BL 3.50/03/180LR SN OR BX

Weidmüller Interface GmbH & Co. KG
Klingenbergstraße 26
D-32758 Detmold
Germany
Fon: +49 5231 14-0
Fax: +49 5231 14-292083
www.weidmueller.com

Technical data

Plug gauge in accordance with EN 60999 a x b; ø	2.4 mm x 1.5 mm		
Clampable conductor	Cross-section for conductor connection	Type	fine-wired
		nominal	0.5 mm²
	wire end ferrule	Stripping length	nominal 8 mm
		Recommended wire-end ferrule	H0,5/12 OR
		Stripping length	nominal 6 mm
		Recommended wire-end ferrule	H0,5/6
	Cross-section for conductor connection	Type	fine-wired
		nominal	0.75 mm²
	wire end ferrule	Stripping length	nominal 8 mm
		Recommended wire-end ferrule	H0,75/12 W
		Stripping length	nominal 6 mm
		Recommended wire-end ferrule	H0,75/6
	Cross-section for conductor connection	Type	fine-wired
		nominal	1 mm²
	wire end ferrule	Stripping length	nominal 8 mm
		Recommended wire-end ferrule	H1,0/12 GE
		Stripping length	nominal 6 mm
		Recommended wire-end ferrule	H1,0/6
	Cross-section for conductor connection	Type	fine-wired
		nominal	0.25 mm²
	wire end ferrule	Stripping length	nominal 8 mm
		Recommended wire-end ferrule	H0,25/10 HBL
		Stripping length	nominal 5 mm
		Recommended wire-end ferrule	H0,25/5
	Cross-section for conductor connection	Type	fine-wired
		nominal	0.34 mm²
	wire end ferrule	Stripping length	nominal 8 mm
		Recommended wire-end ferrule	H0,34/10 TK
Reference text	The outside diameter of the plastic collar should not be larger than the pitch (P), Length of ferrules is to be chosen depending on the product and the rated voltage.		
Max. clamping range	1.5 mm²		

Rated data acc. to IEC

tested acc. to standard	IEC 60664-1, IEC 61984	Rated current, min. number of poles (Tu=20°C)	17 A
Rated current, max. number of poles (Tu=20°C)	12 A	Rated current, min. number of poles (Tu=40°C)	14.5 A
Rated current, max. number of poles (Tu=40°C)	10 A	Rated voltage for surge voltage class / pollution degree II/2	320 V
Rated voltage for surge voltage class / pollution degree III/2	160 V	Rated voltage for surge voltage class / pollution degree III/3	160 V
Rated impulse voltage for surge voltage class/ pollution degree II/2	2.5 kV	Rated impulse voltage for surge voltage class/ pollution degree III/2	2.5 kV
Rated impulse voltage for surge voltage class/ contamination degree III/3	2.5 kV	Short-time withstand current resistance	3 x 1s with 100 A

OMNIMATE Signal - series BL/SL 3.50
BL 3.50/03/180LR SN OR BX

Weidmüller Interface GmbH & Co. KG
Klingenbergstraße 26
D-32758 Detmold
Germany
Fon: +49 5231 14-0
Fax: +49 5231 14-292083
www.weidmueller.com

Technical data

Rated data acc. to CSA

Rated voltage (Use group B / CSA)	300 V	Rated voltage (Use group D / CSA)	300 V
Rated current (Use group B / CSA)	10 A	Rated current (Use group D / CSA)	10 A
Wire cross-section, AWG, min.	AWG 28	Wire cross-section, AWG, max.	AWG 14

Rated data acc. to UL 1059

Institute (UR)		Certificate No. (UR)	E60693
Rated voltage (Use group B / UL 1059)	300 V	Rated voltage (Use group D / UL 1059)	300 V
Rated current (Use group B / UL 1059)	10 A	Rated current (Use group D / UL 1059)	10 A
Wire cross-section, AWG, min.	AWG 28	Wire cross-section, AWG, max.	AWG 14
Reference to approval values	Specifications are maximum values, details - see approval certificate.		

Packing

Packaging	Box	VPE length	0
VPE width	0	VPE height	0

Classifications

ETIM 6.0	EC002638	ETIM 7.0	EC002638
eClass 9.0	27-44-03-09	eClass 9.1	27-44-03-09
eClass 10.0	27-44-03-09		

Notes

Notes	• Additional colours on request • Gold-plated contact surfaces on request • Rated current related to rated cross-section & min. No. of poles. • Max. outer diameter of the conductor: 2.9 mm • Wire end ferrule without plastic collar to DIN 46228/1 • Wire end ferrule with plastic collar to DIN 46228/4 • P on drawing = pitch • Rated data refer only to the component itself. Clearance and creepage distances to other components are to be designed in accordance with the relevant application standards.
IPC conformity	Conformity: The products are developed, manufactured and delivered according international recognized standards and norms and comply with the assured properties in the data sheet resp. fulfill decorative properties in accordance with IPC-A-610 "Class 2". Further claims on the products can be evaluated on request.

OMNIMATE Signal - series BL/SL 3.50
BL 3.50/03/180LR SN OR BX

Weidmüller Interface GmbH & Co. KG
Klingenbergstraße 26
D-32758 Detmold
Germany
Fon: +49 5231 14-0
Fax: +49 5231 14-292083
www.weidmueller.com

Technical data

Approvals

Approvals	
ROHS	Conform

Downloads

Approval/Certificate/Document of Conformity	Declaration of the Manufacturer
Brochure/Catalogue	FL DRIVES EN MB DEVICE MANUF. EN FL DRIVES DE FL BUILDING SAFETY EN FL APPL LED LIGHTING EN FL INDUSTR.CONTROLS EN FL MACHINE SAFETY EN FL HEATING ELECTR EN FL APPL_INVERTER EN FL_BASE_STATION_EN FL ELEVATOR EN FL POWER SUPPLY EN FL 72H SAMPLE SER EN PO OMNIMATE EN
Engineering Data	STEP
Product Change Notification	Change of Material LR 3.50 - DE Change of Material LR 3.50 - EN

OMNIMATE Signal - series BL/SL 3.50
BL 3.50/03/180LR SN OR BX

Weidmüller Interface GmbH & Co. KG
Klingenbergstraße 26
D-32758 Detmold
Germany
Fon: +49 5231 14-0
Fax: +49 5231 14-292083
www.weidmueller.com

Drawings

Dimensional drawing

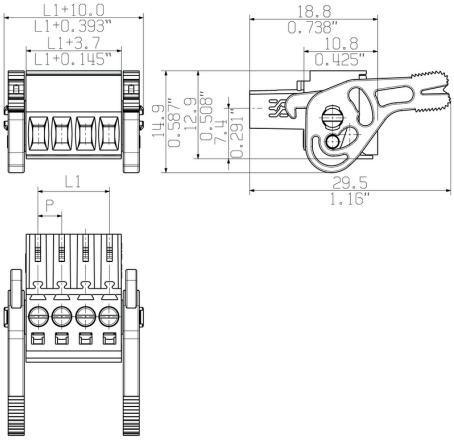

Graph

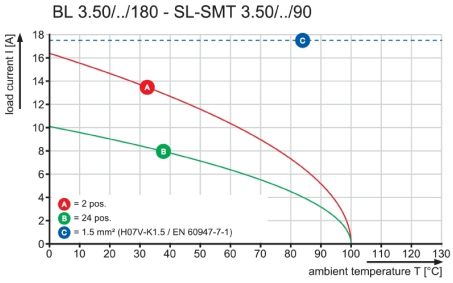

Graph

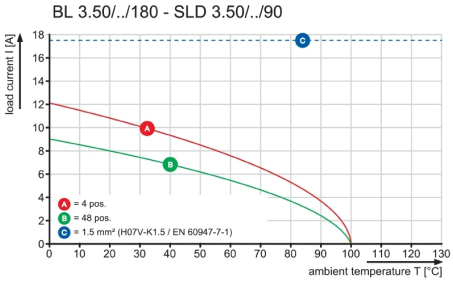

Graph

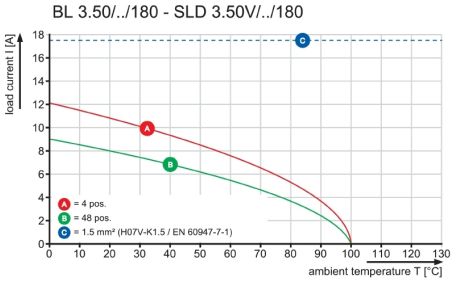

Graph

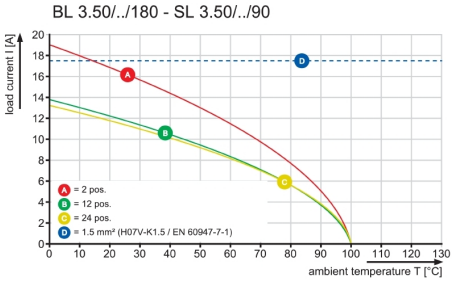

OMNIMATE Signal - series BL/SL 3.50
BL 3.50/03/180LR SN OR BX

Weidmüller Interface GmbH & Co. KG
Klingenbergstraße 26
D-32758 Detmold
Germany
Fon: +49 5231 14-0
Fax: +49 5231 14-292083
www.weidmueller.com

Mating connector (fully pluggable)

SL-SMT 3.5/90RF

High-temperature-resistant male header, 3.50 mm pitch.

- **Plugging direction parallel (90°), straight 180° or angled (135°) to PCB**
- **Housing variants: closed side (G), screw flange (F), solder flange (LF) or snap-on solder flange (RF)**
- **Optimised for the SMT process**
- **Pin length 3.2 mm universal for all soldering methods**
- **Pin length 1.5 mm optimised for reflow soldering methods**
- **Packed either in a box (BX) or tape-on-reel (RL)**
- **Male header can be coded**

General ordering data

Type	SL-SMT 3.50/03/90RF 1.5 ...	Version	Product data	Packaging
Order No.	1060810000	PCB plug-in connector, male header, Clip-on flange, THT/THR solder	IEC: 320 V / 15 A	Box
GTIN (EAN)	4032248810284	connection, 3.50 mm, Number of poles: 3, 90°, Solder pin length (l):	UL: 300 V / 10 A	
Qty.	100 pc(s).	1.5 mm, tinned, black, Box		

SL-SMT 3.5/180RF

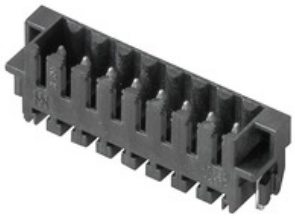

High-temperature-resistant male header, 3.50 mm pitch.

- **Plugging direction parallel (90°), straight 180° or angled (135°) to PCB**
- **Housing variants: closed side (G), screw flange (F), solder flange (LF) or snap-on solder flange (RF)**
- **Optimised for the SMT process**
- **Pin length 3.2 mm universal for all soldering methods**
- **Pin length 1.5 mm optimised for reflow soldering methods**
- **Packed either in a box (BX) or tape-on-reel (RL)**
- **Male header can be coded**

General ordering data

Type	SL-SMT 3.50/03/180RF 1. ...	Version	Product data	Packaging
Order No.	1291300000	PCB plug-in connector, male header, Clip-on flange, THT/THR solder	IEC: 320 V / 15 A	Box
GTIN (EAN)	4050118085235	connection, 3.50 mm, Number of poles: 3, 180°, Solder pin length (l):	UL: 300 V / 10 A	
Qty.	100 pc(s).	1.5 mm, tinned, black, Box		

BL 3.50/04/180F

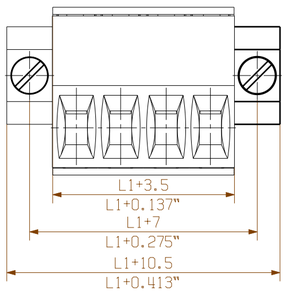

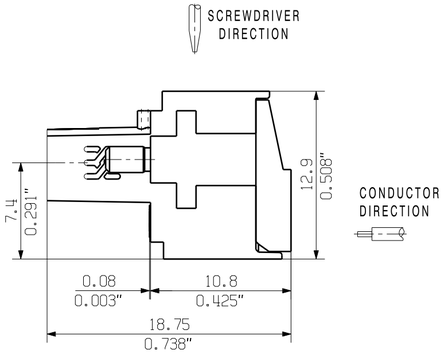

M 1/1

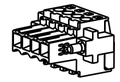

BL 3.50/04/180LH

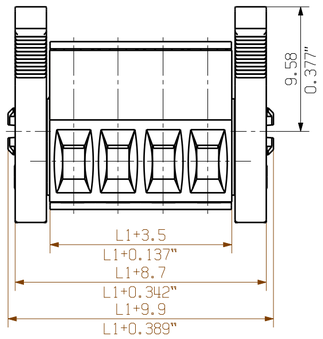

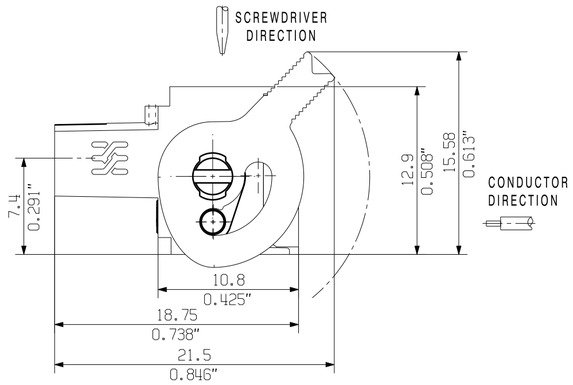

M 1/1

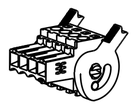

BL 3.50/04/180LR

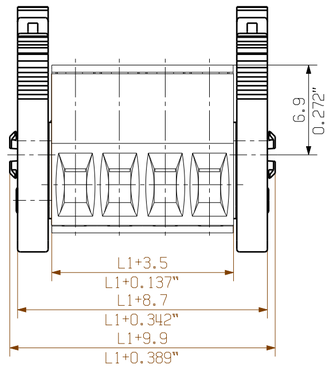

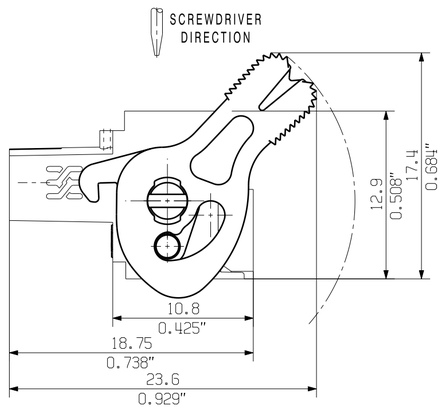

M 1/1

BL 3.50/04/180LR REDESIGN

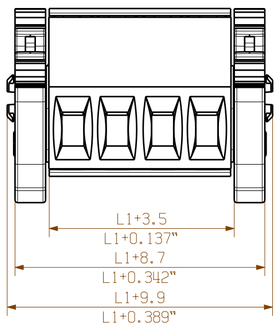

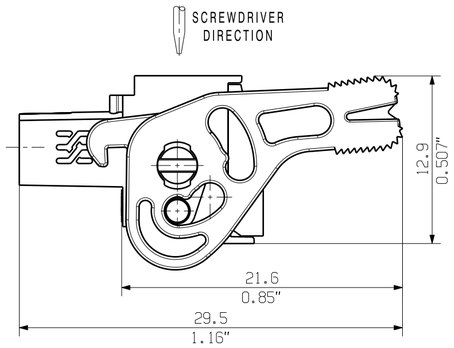

M 1/1

BL 3.50/04/180

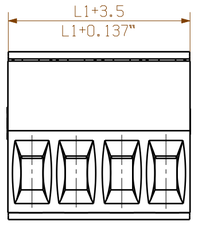

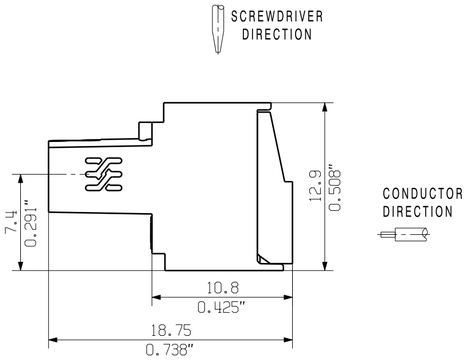

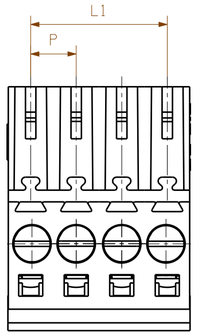

M 1/1

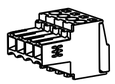

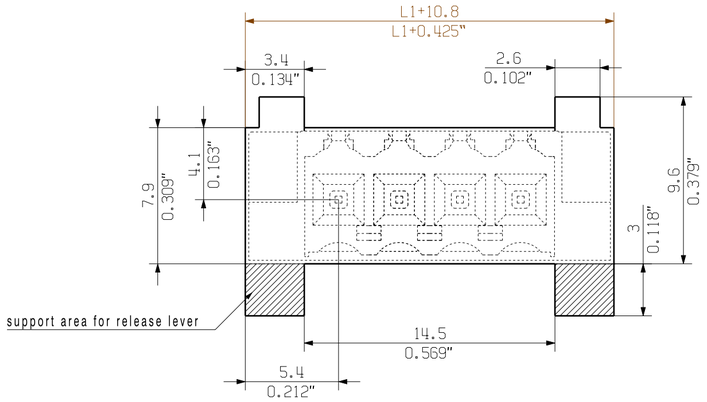

MIN. FRONT PLATE CUT-OUT

P = 3.50 RASTER PITCH

For the mounting of PCBs, it should be noted that the rated data given in the catalogue relates only to the connection elements. The neccessary creepage and clearance paths must be observed in connection with the respective applicant in accordance to VDE 0110. The current-carrying capacity and pitch tolerance is to be determined according to DIN IEC 326 part 3 very fine.

Weidmüller connectors are tested to the DIN VDE 0627 standard, and are valid for its field of application. Provided that the connectors are used to the intended purpose, all requirements with respect to the occuring of electrical, mechanical, thermic and corrosive stress will be satisfied.

n POLZAHL POLES	L1 [mm]	L1 [inch]
24	80.5	3.169
23	77.0	3.032
22	73.5	2.894
21	70.0	2.756
20	66.5	2.618
19	63.0	2.480
18	59.5	2.343
17	56.0	2.205
16	52.5	2.067
15	49.0	1.929
14	45.5	1.791
13	42.0	1.654
12	38.5	1.516
11	35.0	1.378
10	31.5	1.240
9	28.0	1.102
8	24.5	0.965
7	21.0	0.827
6	17.5	0.689
5	14.0	0.551
4	10.5	0.413
3	7.0	0.276
2	3.5	0.138

ALLGEMEINGUELTIGE KUNDENZEICHNUNG, AKTUELLER STAND NUR AUF ANFRAGE
GENERAL CUSTOMER DRAWING, TOPICAL VERSION ONLY IF REQUIRED

GENERAL TOLERANCE: DIN ISO 2768-m

RoHS COMPLIANT

103300/5 17.05.18 HELIS_MA 01

Modification

	Date	Name
Drawn	02.09.2008	HELIS_MA
Responsible		AMANN_A
Checked		
Approved		LANG_T

Scale: 5/1

Supersedes: .

Cat.no.: .

Weidmüller

Drawing no. 3 19675 Issue no. 36

Sheet 00 of 00 sheets

BL 3.50/../180

BUCHSENSTECKER
FEMALE PLUG

Pruefung / Verification

Product file: BL 3.50

7382

The reproduction, distribution and utilization of this document as well as the communication of its contents to others without explicit authorization is prohibited.
Offenders will be held liable for the payment of damages. Weidmueller exclusively reserves the right to file for patents, utility models or designs.
© Weidmueller Interface GmbH & Co. KG