RSM
RSM-8 230VAC 2CO Z

Weidmüller Interface GmbH & Co. KG
Klingenbergstraße 26
D-32758 Detmold
Germany
Fon: +49 5231 14-0
Fax: +49 5231 14-292083
www.weidmueller.com

Similar to illustration

Relay bases (RSM) with common positive and negative to be connected to PLC or other type of controllers. The interfaces are made up of groups of 4, 8 or 16 RCL relays (12.7 mm) or RSS (6.1 mm). The connection to the controller can be set up using pluggable connectors or using direct cabling with IEC 60603-13 connectors. Wide range of options:

- 1 or 2 CO contacts with 16/8/6 A relays
- Voltages from 5 to 230 V
- Screw, tension clamp or PUSH IN connection
- Compatible with Weidmüller's solid-state relays

The range of relays provides galvanic isolation between input/output as well as between the adjacent contacts on the relays. This enables the various voltages in the controllers and those required by the various field elements to be safely adapted.

General ordering data

Type	RSM-8 230VAC 2CO Z
Order No.	1449090000
Version	Interface, RSM, Tension-clamp connection
GTIN (EAN)	4050118253528
Qty.	1 pc(s).

RSM
RSM-8 230VAC 2CO Z

Weidmüller Interface GmbH & Co. KG
Klingenbergstraße 26
D-32758 Detmold
Germany
Fon: +49 5231 14-0
Fax: +49 5231 14-292083
www.weidmueller.com

Technical data

Dimensions and weights

Length	149 mm	Length (inches)	5.866 inch
Width	109 mm	Width (inches)	4.291 inch
Height	66 mm	Height (inches)	2.598 inch
Net weight	369.113 g		

Temperatures

Operating temperature, max.	50 °C	Operating temperature, min.	-25 °C
Storage temperature, max.	60 °C	Storage temperature, min.	-40 °C
Operating temperature	-25...50 °C	Storage temperature	-40...60 °C

General data

LED status display per relay	green

Connection data

Connection on control side	LMZF	Connection (field side)	LM2NZF 5.08mm

Rating data

Mechanical service life	10 x 10^6 switching cycles

Ratings data input

Input voltage	230 V AC ± 10%	Input current	3.3 mA

Ratings data output

Relay type	RCL	Type of output	Potential-free contact
Contact material	AgNi 90/10	Rated voltage (text)	≤ 250 V AC
Max. AC continuous current	5 A	Minimum contact current	0.1 A
Minimum contact voltage	5 V		

Insulation coordination (EN50178)

Pollution severity level	2	Pulse voltage test (1,2/50µs)	6 kV
Insulation test voltage	1.2 kVAC		

Insulation coordinates (EN50178)

Rated input insulation voltage	< 50 V AC	Rated output insulation voltage	250 V AC
Overvoltage category input/output	III	Overvoltage category output/output	III
Pollution severity level	2	Pulse voltage test (1,2/50µs)	6 kV
Insulation test voltage	1.2 kVAC	Clearance input/output	≥ 5.5 mm

Connection field

Type of connection	Tension-clamp connection	Clamping range, min.	0.13 mm²
Clamping range, max.	2.5 mm²	Solid, min. H05(07) V-U	0.5 mm²
Solid, max. H05(07) V-U	1.5 mm²	Flexible, min. H05(07) V-K	0.5 mm²
Flexible, max. H05(07) V-K	1.5 mm²	Flexible with sleeve, max.	1.5 mm²
Min. wire cross-section, AWG	AWG 26	Max. wire cross-section, AWG	AWG 14
Stripping length	7 mm		

RSM
RSM-8 230VAC 2CO Z

Weidmüller Interface GmbH & Co. KG
Klingenbergstraße 26
D-32758 Detmold
Germany
Fon: +49 5231 14-0
Fax: +49 5231 14-292083
www.weidmueller.com

Technical data

Classifications

ETIM 6.0	EC002780	ETIM 7.0	EC002780
eClass 9.0	27-14-11-52	eClass 9.1	27-24-22-16
eClass 10.0	27-14-11-52		

Approvals

Approvals	CE
ROHS	Conform

Downloads

Brochure/Catalogue	CAT 4.5 ELECTR 16/17 EN

RSM
RSM-8 230VAC 2CO Z

Weidmüller Interface GmbH & Co. KG
Klingenbergstraße 26
D-32758 Detmold
Germany
Fon: +49 5231 14-0
Fax: +49 5231 14-292083
www.weidmueller.com
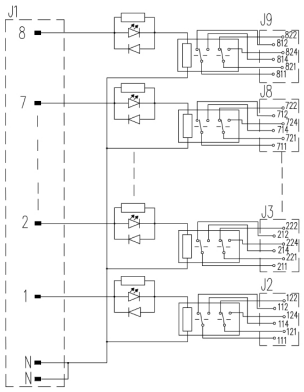
Drawings