Industrial Ethernet
IE-PCBR2-M12X-S-180

Weidmüller Interface GmbH & Co. KG
Klingenbergstraße 26
D-32758 Detmold
Germany
Fon: +49 5231 14-0
Fax: +49 5231 14-292083
www.weidmueller.com

M12 X type cat. 6A PCB socket, pre-assembled or 2-piece, reflow compatible

General ordering data

Type	IE-PCBR2-M12X-S-180
Order No.	1444650000
Version	PCB plug-in connector, M12, Solder connection, Cat.6$_A$ / Class E$_A$ (ISO/IEC 11801 2010), IP67, when screwed in, Reflow compatible, Back panel mounting, 2-part
GTIN (EAN)	4050118250060
Qty.	10 pc(s).

Creation date May 4, 2020 7:13:50 AM CEST

Industrial Ethernet
IE-PCBR2-M12X-S-180

Weidmüller Interface GmbH & Co. KG
Klingenbergstraße 26
D-32758 Detmold
Germany
Fon: +49 5231 14-0
Fax: +49 5231 14-292083
www.weidmueller.com

Technical data

Dimensions and weights

Wall thickness, max.	2.5 mm	Wall thickness, min.	0.9 mm
Net weight	16 g		

Temperatures

Operating temperature, max.	85 °C	Operating temperature, min.	-40 °C
Operating temperature	-40 °C...85 °C		

Environmental Product Compliance

REACH SVHC	Lead 7439-92-1

General Info

Connection 1	M12	Connection 2	Solder connection
Configuration	Reflow compatible, Back panel mounting	Housing main material	CuZn
Category	Cat.6$_A$ / Class E$_A$ (ISO/IEC 11801 2010)	Connection thread	M12
Contact material	CuZn	Contact surface	Gold over nickel
Shielding material	CuSn	Shielding	360° all-round enclosure
Protection degree	IP67, when screwed in	Plugging cycles	≥ 100

Electrical properties

Current-carrying capacity at 50 °C	0.5 A @ 40 °C	Insulation strength	100 MΩ
Rated voltage	48 V		

General standards

Certificate no. (cULus)	E316369	Connector standard	IEC 61076-2-109

Classifications

ETIM 6.0	EC002638	ETIM 7.0	EC002638
eClass 9.0	27-44-03-09	eClass 9.1	27-44-03-09
eClass 10.0	27-44-03-09		

Approvals

Approvals	c UL us LISTED
ROHS	Conform

Industrial Ethernet
IE-PCBR2-M12X-S-180

Weidmüller Interface GmbH & Co. KG
Klingenbergstraße 26
D-32758 Detmold
Germany
Fon: +49 5231 14-0
Fax: +49 5231 14-292083
www.weidmueller.com

Technical data

Downloads

Approval/Certificate/Document of Conformity	DUXR.E316369 CC Link IE Field M12-X
Brochure/Catalogue	CAT 9 IETH 18/19 EN MB FREECONCONTACT EN FL FIELDWIRING EN PI PROFINET CABLING EN
User Documentation	MAN IE GUIDE DE MAN IE GUIDE EN

Industrial Ethernet
IE-PCBR2-M12X-S-180

Weidmüller Interface GmbH & Co. KG
Klingenbergstraße 26
D-32758 Detmold
Germany
Fon: +49 5231 14-0
Fax: +49 5231 14-292083
www.weidmueller.com

Drawings

Dimensioned drawing

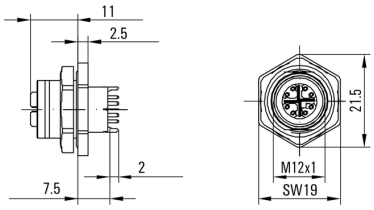

Pinning

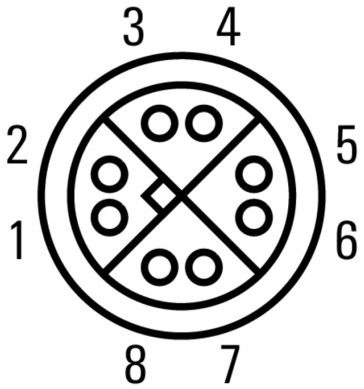

Drilling template

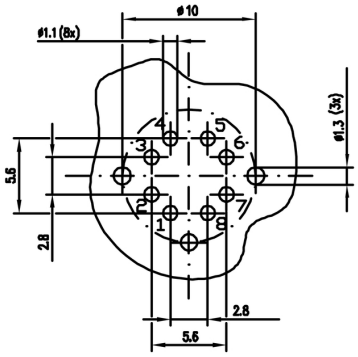

Installation cut-out

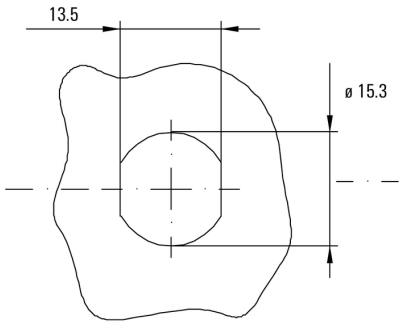

Industrial Ethernet
IE-PCBR2-M12X-S-180

Weidmüller Interface GmbH & Co. KG
Klingenbergstraße 26
D-32758 Detmold
Germany
Fon: +49 5231 14-0
Fax: +49 5231 14-292083
www.weidmueller.com

Accessories

Tool

Tools for stripping the sheathing from uncut power lines and outlet lines, plus screwdrivers for installing Pick-to-Light components.

General ordering data

Type	SCREWTY SET -DM	Version
Order No.	1920000000	Tools, Bolting tool
GTIN (EAN)	4032248436859	
Qty.	1 pc(s).	

Screwty® cable gland tool

The ideal tool for any application
Screwty® is the ideal, all-purpose tool for tightening all common sensor and actuator cables. Even difficult-to-reach round plugs are accessible using the Screwty®. A simple turning movement tightens and loosens the connectors without the need for excessive force. The Screwty® is a unique and global solution since it fits with most cables and plugs from other vendors (over 90 %). The Screwty® consists of a handle with a conventional 1/4" adapter. Thus it can be used for all sizes: for M12 and M8 round plug-in connectors, and for M12F and M8F customisable plugs and sockets, as well as for all M23 plugs and sockets.

General ordering data

Type	SCREWTY SET	Version
Order No.	1910000000	Tools, Bolting tool
GTIN (EAN)	4032248436842	
Qty.	1 pc(s).	
Type	SCREWTY- M12 F	Version
Order No.	1900020000	Tools, Cable gland tool for M12 connectors
GTIN (EAN)	4032248375851	
Qty.	1 pc(s).	

Industrial Ethernet
IE-PCBR2-M12X-S-180

Weidmüller Interface GmbH & Co. KG
Klingenbergstraße 26
D-32758 Detmold
Germany
Fon: +49 5231 14-0
Fax: +49 5231 14-292083
www.weidmueller.com

Accessories

Screwty® cable gland tool with torque function

The ideal tool for any application
Screwty® is the ideal, all-purpose tool for tightening all common sensor and actuator cables. Even difficult-to-reach round plugs are accessible using the Screwty®. A simple turning movement tightens and loosens the connectors without the need for excessive force. The Screwty® is a unique and global solution since it fits with most cables and plugs from other vendors (over 90 %). The Screwty® consists of a handle with a conventional 1/4" adapter. Thus it can be used for all sizes: for M12 and M8 round plug-in connectors, and for M12F and M8F customisable plugs and sockets, as well as for all M23 plugs and sockets.

General ordering data

Type	SCREWTY-M12 F-DM	Version
Order No.	1900021000	Tools, Cable gland tool for M12 connectors
GTIN (EAN)	4032248436828	
Qty.	1 pc(s).	