OMNIMATE Signal - series LMF
LMFS 5.08/03/90 3.5SN OR BX

Weidmüller Interface GmbH & Co. KG
Klingenbergstraße 26
D-32758 Detmold
Germany
Fon: +49 5231 14-0
Fax: +49 5231 14-292083
www.weidmueller.com

Product image

Similar to illustration

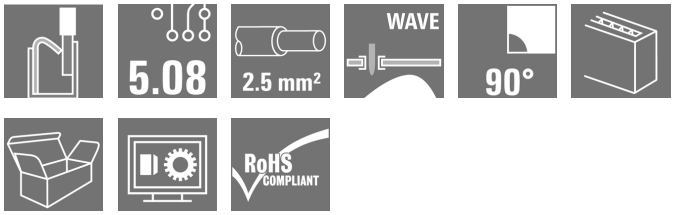

The new LMF allows us to meet the current market requirements for a PCB terminal with PUSH IN connection system for wire cross-sections up to 2.5 mm^2

- PUSH IN connection system
- LMF with pusher for opening the terminal point
- LMFS without pusher, the terminal point is opened with a screwdriver
- Integrated test point
- 90° and 180° wire outlet direction

General ordering data

Type	LMFS 5.08/03/90 3.5SN OR BX
Order No.	1330970000
Version	Printed circuit board terminals, 5.08 mm, Number of poles: 3, 90°, Solder pin length (l): 3.5 mm, tinned, orange, PUSH IN without actuator, Clamping range, max. : 2.5 mm², Box
GTIN (EAN)	4050118134995
Qty.	90 pc(s).
Product data	IEC: 400 V / 24 A / 0.2 - 2.5 mm² UL: 300 V / 20 A / AWG 24 - AWG 12
Packaging	Box

Creation date May 3, 2020 2:43:25 AM CEST

OMNIMATE Signal - series LMF
LMFS 5.08/03/90 3.5SN OR BX

Weidmüller Interface GmbH & Co. KG
Klingenbergstraße 26
D-32758 Detmold
Germany
Fon: +49 5231 14-0
Fax: +49 5231 14-292083
www.weidmueller.com

Technical data

Dimensions and weights

Width	17.86 mm	Width (inches)	0.703 inch
Height	18.3 mm	Height (inches)	0.72 inch
Height of lowest version	14.8 mm	Depth	15.2 mm
Depth (inches)	0.598 inch	Net weight	5.74 g

System parameters

Product family	OMNIMATE Signal - series LMF	Wire connection method	PUSH IN without actuator
Mounting onto the PCB	THT solder connection	Conductor outlet direction	90°
Pitch in mm (P)	5.08 mm	Pitch in inches (P)	0.2 inch
Number of poles	3	Fitted by customer	No
Max. adjacent poles per row	24	Solder pin length (l)	3.5 mm
Solder pin dimensions	d = 0.8 mm	Solder eyelet hole diameter (D)	1.1 mm
Solder eyelet hole diameter tolerance (D)	+ 0,1 mm	Number of solder pins per pole	2
Screwdriver blade	0.6 x 3.5	Screwdriver blade standard	DIN 5264
Stripping length	10 mm	L1 in mm	10.16 mm
L1 in inches	0.4 inch	Touch-safe protection acc. to DIN VDE 0470	IP 20
Touch-safe protection acc. to DIN VDE 57 106	Safe from finger touch		

Material data

Insulating material	Wemid (PA)	Colour	orange
Colour chart (similar)	RAL 2000	Comparative Tracking Index (CTI)	≥ 600
Insulation strength	≥ 10^8 Ω	UL 94 flammability rating	V-0
Contact material	CuSn	Contact surface	tinned
Coating	4-6 µm SN	Tinning type	matt
Layer structure of solder connection	4-6 µm Sn matt	Storage temperature, min.	-25 °C
Storage temperature, max.	50 °C	Max. relative humidity during storage	70 %
Operating temperature, min.	-50 °C	Operating temperature, max.	120 °C
Temperature range, installation, min.	-25 °C	Temperature range, installation, max.	120 °C

Conductors suitable for connection

Clamping range, min.	0.12 mm²
Clamping range, max.	2.5 mm²
Wire connection cross section AWG, min.	AWG 24
Wire connection cross section AWG, max.	AWG 12
Solid, min. H05(07) V-U	0.2 mm²
Solid, max. H05(07) V-U	2.5 mm²
Flexible, min. H05(07) V-K	0.2 mm²
Flexible, max. H05(07) V-K	2.5 mm²
w. plastic collar ferrule, DIN 46228 pt 4, min.	0.25 mm²
w. plastic collar ferrule, DIN 46228 pt 4, max.	2.5 mm²
w. wire end ferrule, DIN 46228 pt 1, min.	0.25 mm²
w. wire end ferrule, DIN 46228 pt 1, max.	2.5 mm²
Plug gauge in accordance with EN 60999 a x b; ø	2.4 mm x 1.5 mm

Weidmüller

OMNIMATE Signal - series LMF
LMFS 5.08/03/90 3.5SN OR BX

Weidmüller Interface GmbH & Co. KG
Klingenbergstraße 26
D-32758 Detmold
Germany
Fon: +49 5231 14-0
Fax: +49 5231 14-292083
www.weidmueller.com

Technical data

Clampable conductor	Cross-section for conductor connection	Type	fine-wired	
		nominal	0.5 mm²	
	wire end ferrule	Stripping length	nominal	12 mm
		Recommended wire-end ferrule	H0,5/16 OR	
		Stripping length	nominal	10 mm
		Recommended wire-end ferrule	H0,5/10	
	Cross-section for conductor connection	Type	fine-wired	
		nominal	0.75 mm²	
	wire end ferrule	Stripping length	nominal	12 mm
		Recommended wire-end ferrule	H0,75/16 W	
		Stripping length	nominal	10 mm
		Recommended wire-end ferrule	H0,75/10	
	Cross-section for conductor connection	Type	fine-wired	
		nominal	1 mm²	
	wire end ferrule	Stripping length	nominal	12 mm
		Recommended wire-end ferrule	H1,0/16D R	
		Stripping length	nominal	10 mm
		Recommended wire-end ferrule	H1,0/10	
	Cross-section for conductor connection	Type	fine-wired	
		nominal	1.5 mm²	
	wire end ferrule	Stripping length	nominal	10 mm
		Recommended wire-end ferrule	H1,5/10	
		Stripping length	nominal	12 mm
		Recommended wire-end ferrule	H1,5/16 R	
	Cross-section for conductor connection	Type	fine-wired	
		nominal	2.5 mm²	
	wire end ferrule	Stripping length	nominal	10 mm
		Recommended wire-end ferrule	H2,5/10	
Reference text	Length of ferrules is to be chosen depending on the product and the rated voltage., The outside diameter of the plastic collar should not be larger than the pitch (P)			
Max. clamping range	2.5 mm²			

Rated data acc. to IEC

tested acc. to standard	IEC 60664-1, IEC 61984	Rated current, min. number of poles (Tu=20°C)	24 A
Rated current, max. number of poles (Tu=20°C)	24 A	Rated current, min. number of poles (Tu=40°C)	24 A
Rated current, max. number of poles (Tu=40°C)	24 A	Rated voltage for surge voltage class / pollution degree II/2	400 V
Rated voltage for surge voltage class / pollution degree III/2	320 V	Rated voltage for surge voltage class / pollution degree III/3	250 V
Rated impulse voltage for surge voltage class/ pollution degree II/2	4 kV	Rated impulse voltage for surge voltage class/ pollution degree III/2	4 kV
Rated impulse voltage for surge voltage class/ contamination degree III/3	4 kV	Short-time withstand current resistance	3 x 1s with 120 A

OMNIMATE Signal - series LMF
LMFS 5.08/03/90 3.5SN OR BX

Weidmüller Interface GmbH & Co. KG
Klingenbergstraße 26
D-32758 Detmold
Germany
Fon: +49 5231 14-0
Fax: +49 5231 14-292083
www.weidmueller.com

Technical data

Rated data acc. to CSA

Institute (CSA)		Certificate No. (CSA)	
			200039-1815154
Rated voltage (Use group B / CSA)	300 V	Rated voltage (Use group D / CSA)	300 V
Rated current (Use group B / CSA)	20 A	Rated current (Use group D / CSA)	10 A
Wire cross-section, AWG, min.	AWG 24	Wire cross-section, AWG, max.	AWG 12
Reference to approval values	Specifications are maximum values, details - see approval certificate.		

Rated data acc. to UL 1059

Institute (cURus)		Certificate No. (cURus)	
			E60693
Rated voltage (Use group B / UL 1059)	300 V	Rated voltage (Use group D / UL 1059)	300 V
Rated current (Use group B / UL 1059)	20 A	Rated current (Use group D / UL 1059)	10 A
Wire cross-section, AWG, min.	AWG 24	Wire cross-section, AWG, max.	AWG 12
Reference to approval values	Specifications are maximum values, details - see approval certificate.		

Packing

Packaging	Box	VPE length	30 mm
VPE width	140 mm	VPE height	350 mm

Classifications

ETIM 6.0	EC002643	ETIM 7.0	EC002643
eClass 9.0	27-44-04-01	eClass 9.1	27-44-04-01
eClass 10.0	27-44-04-01		

Notes

Notes	• Additional colours on request • Rated current related to rated cross-section & min. No. of poles. • Wire end ferrule without plastic collar to DIN 46228/1 • Wire end ferrule with plastic collar to DIN 46228/4 • P on drawing = pitch • Rated data refer only to the component itself. Clearance and creepage distances to other components are to be designed in accordance with the relevant application standards. • The test point can only be used as potential-pickup point.
IPC conformity	Conformity: The products are developed, manufactured and delivered according international recognized standards and norms and comply with the assured properties in the data sheet resp. fulfill decorative properties in accordance with IPC-A-610 "Class 2". Further claims on the products can be evaluated on request.

OMNIMATE Signal - series LMF
LMFS 5.08/03/90 3.5SN OR BX

Weidmüller Interface GmbH & Co. KG
Klingenbergstraße 26
D-32758 Detmold
Germany
Fon: +49 5231 14-0
Fax: +49 5231 14-292083
www.weidmueller.com

Technical data

Approvals

Approvals	
ROHS	Conform

Downloads

Approval/Certificate/Document of Conformity	Declaration of the Manufacturer
Brochure/Catalogue	FL DRIVES EN FL ANALO.SIGN.CONV. EN MB DEVICE MANUF. EN FL DRIVES DE CAT 2 PORTFOLIOGUIDE EN FL BUILDING SAFETY EN FL APPL LED LIGHTING EN FL INDUSTR.CONTROLS EN FL MACHINE SAFETY EN FL HEATING ELECTR EN FL APPL_INVERTER EN FL_BASE_STATION_EN FL ELEVATOR EN FL POWER SUPPLY EN FL 72H SAMPLE SER EN PO OMNIMATE EN
Engineering Data	EPLAN, WSCAD
Engineering Data	STEP

OMNIMATE Signal - series LMF
LMFS 5.08/03/90 3.5SN OR BX

Weidmüller Interface GmbH & Co. KG
Klingenbergstraße 26
D-32758 Detmold
Germany
Fon: +49 5231 14-0
Fax: +49 5231 14-292083
www.weidmueller.com

Drawings

Dimensional drawing

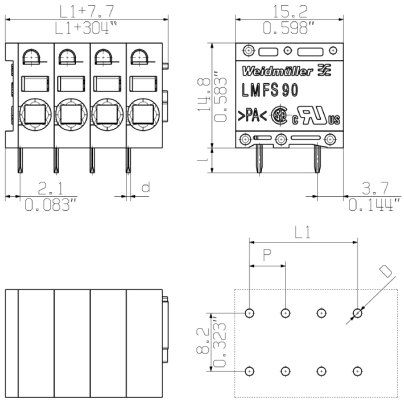

Dimensional drawing

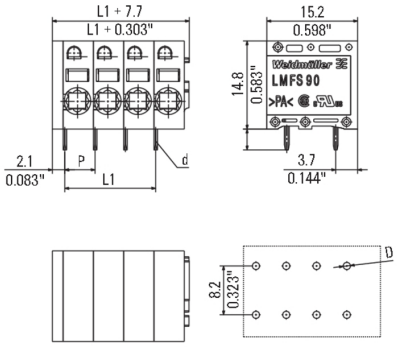

Graph

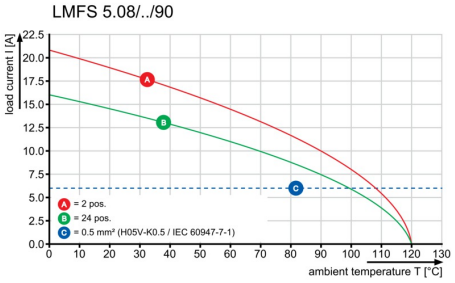

Graph

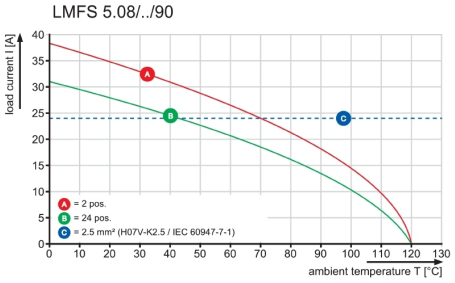

Product benefits

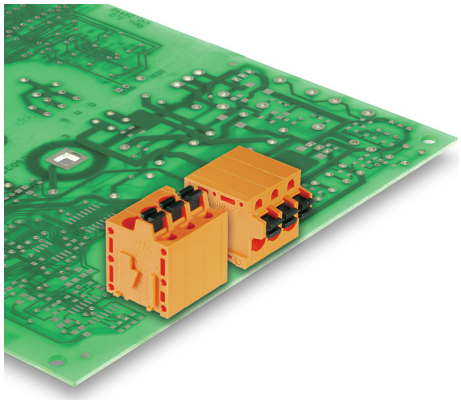

Optional conductor outlet direction
Stable mechanical design

Product benefits

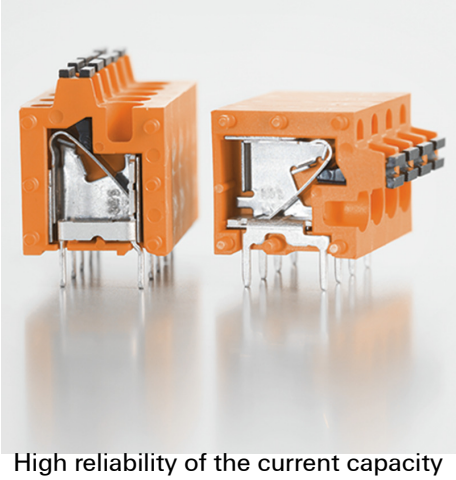

High reliability of the current capacity

OMNIMATE Signal - series LMF
LMFS 5.08/03/90 3.5SN OR BX

Weidmüller Interface GmbH & Co. KG
Klingenbergstraße 26
D-32758 Detmold
Germany
Fon: +49 5231 14-0
Fax: +49 5231 14-292083
www.weidmueller.com

Accessories

Additional accessories

No task is too small when creating the perfect solution.
Connections form just one part of the overall process. Small details are often the key to the perfect solution in applications where potentials are tested, grouped or even isolated.
A system is not a system without small but essential details:
- Test plugs ensure reliable pick-up from diagnostic sockets

In tandem with the manufacturing process and application.

General ordering data

Type	PS 2.0 MC	Version	Product data	Packaging
Order No.	0310000000	PCB plug-in connector, Accessories, Test plug, red, Number of poles: 1		Box
GTIN (EAN)	4008190000059			
Qty.	20 pc(s).			

Slotted screwdriver

VDE insulated slot-head screwdriver, SDI DIN 7437, ISO 2380/2, drive output acc. to DIN 5264, ISO 2380/1. SoftFinish grip

General ordering data

Type	SDIS 0.6X3.5X100	Version
Order No.	9008390000	Screwdriver, Blade width (B): 3.5 mm, Blade length: 100 mm, Blade
GTIN (EAN)	4032248056354	thickness (A): 0.6 mm
Qty.	1 pc(s).	

OMNIMATE Signal - series LMF
LMFS 5.08/03/90 3.5SN OR BX

Weidmüller Interface GmbH & Co. KG
Klingenbergstraße 26
D-32758 Detmold
Germany
Fon: +49 5231 14-0
Fax: +49 5231 14-292083
www.weidmueller.com

Drawings

Product benefits

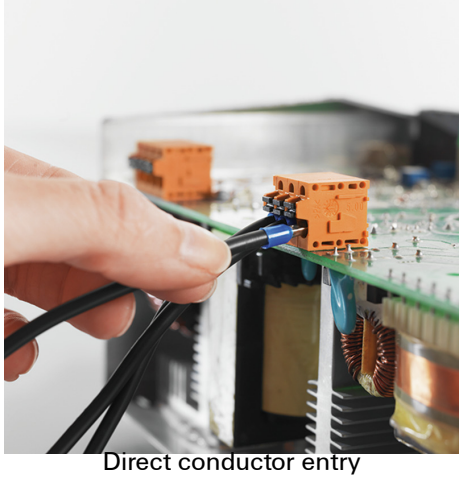

Direct conductor entry
Cross section up to 2.5 mm²

Product benefits

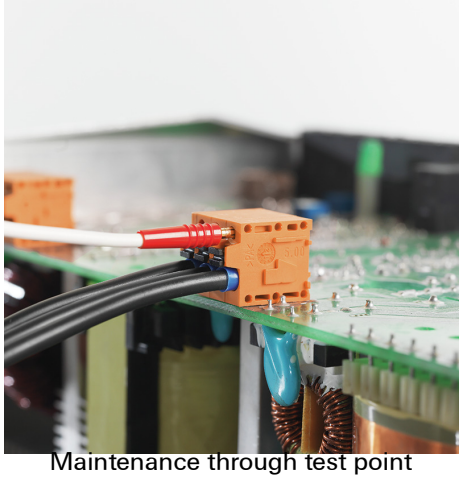

Maintenance through test point

MASSE OHNE TOLERANZ SIND KEINE PRUEFMASSE
DIMS. WITHOUT TOLERANCE ARE NOT CONTROL DIMS.

DIE DEUTSCHE VERSION IST VERBINDLICH
THE GERMAN VERSION IS BINDING

ALLGEMEINGUELTIGE KUNDENZEICHNUNG, AKTUELLER STAND NUR AUF ANFRAGE
GENERAL CUSTOMER DRAWING, TOPICAL VERSION ONLY IF REQUIRED

SHOWN: LMF 5.08/04/90 3.5

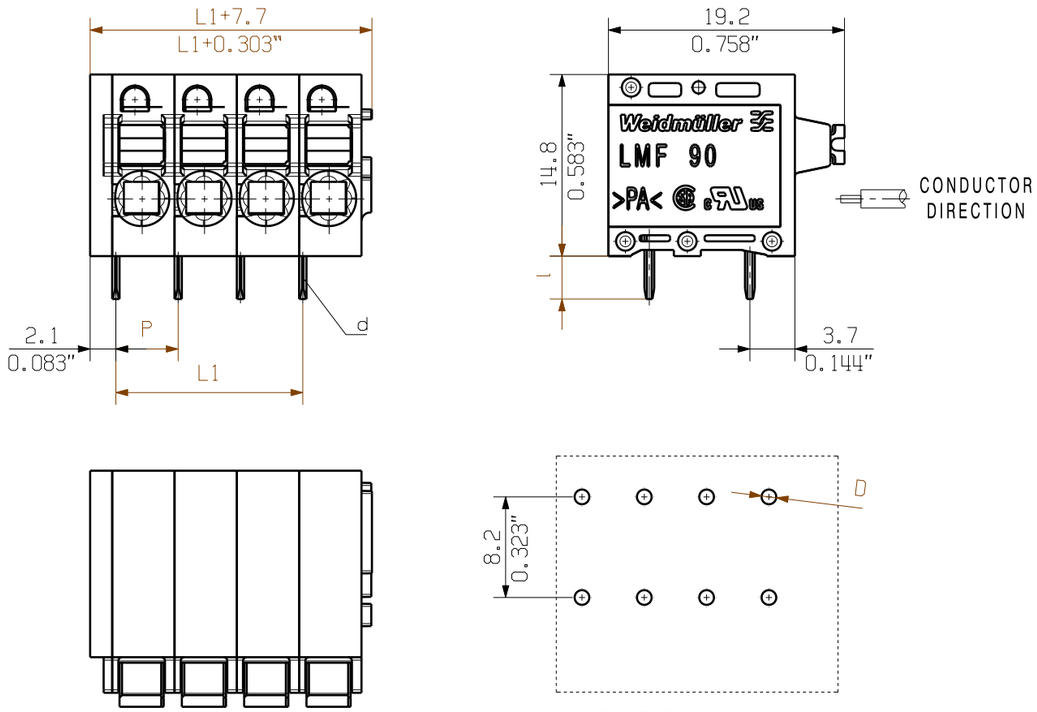

SHOWN: LMFS 5.08/04/90 3.5

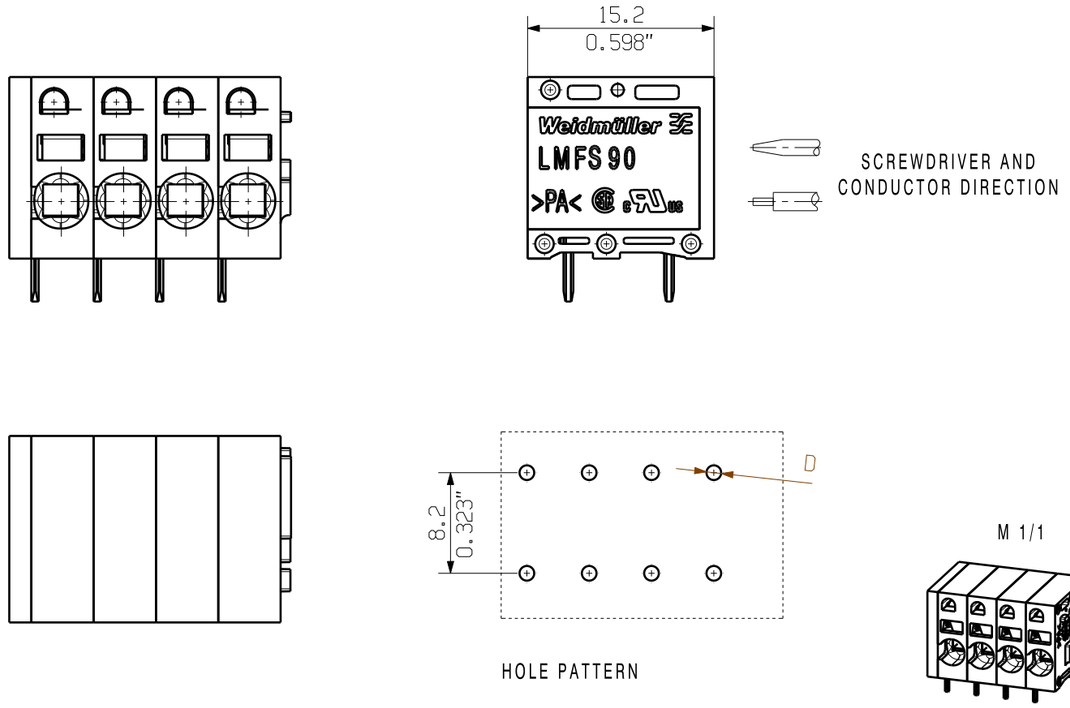

P= 5.08 RASTER PITCH

D= Ø1.1 +0.1 / 0.043"

d= 0.6x0.8 / 0.024"x0.031"

l= 3.5 / 0.138"

For the mounting of PCBs, it should be noted that the rated data relates only to the PCB components alone.
The neccessary creepage and clearance paths must be observed in connection with the respective applicant in accordance to IEC 664 / VDE 0110.
The current-carrying capacity and pitch tolerance is to be determined according to DIN IEC 326 part 3 very fine.

Weidmüller PCB components are tested to the DIN EN 61984
standard, and are valid for its field of application.
Provided that the components are used to the intended purpose, all requirements with respect to the occuring of electrical, mechanical, thermic and corrosive stress will be satisfied.

n POLZAHL POLES	L1 [mm]	L1 [inch]
24	116,84	4.600
23	111.76	4.400
22	106.68	4.200
21	101.60	4.000
20	96.52	3.800
19	91.44	3.600
18	86.36	3.400
17	81.28	3.200
16	76.20	3.000
15	71.12	2.800
14	66.04	2.600
13	60.96	2.400
12	55.88	2.200
11	50.80	2.000
10	45.72	1.800
9	40.64	1.600
8	35.56	1.400
7	30.48	1.200
6	25.40	1.000
5	20.32	0.800
4	15.24	0.600
3	10.16	0.400
2	5.08	0.200

GENERAL TOLERANCE:
DIN ISO 2768-m

RoHS COMPLIANT

70657/4
26.06.13 TIELKER_S 01
MODIFICATION

	DATE	NAME
DRAWN	25.01.2012	REGLIN_A
RESPONSIBLE		SCHMITZ_T
CHECKED	26.06.2013	HECKERT_M
APPROVED		HANKE_D

SCALE: 2/1
SUPERSEDES: .

Weidmüller

CAT.NO.: .

C 55665 03
DRAWING NO. ISSUE NO.
SHEET 01 OF 01 SHEETS

LMF... 5.08/.../90 ...
LEITERPLATTENANSCHLUSSKLEMMEN
PCB TERMINALS

PRODUCT FILE: LMF 5.0X 7403

WEITERGABE SOWIE VERVIELFAELTIGUNG DIESES DOKUMENTS, VERWERTUNG UND MITTEILUNG SEINES INHALTS SIND VERBOTEN, SOWEIT NICHT AUSDRUECKLICH GESTATTET.
ZUWIDERHANDLUNGEN VERPFLICHTEN ZU SCHADENERSATZ. ALLE RECHTE FUER DEN FALL DER PATENT-, GEBRAUCHSMUSTER- ODER GESCHMACKSMUSTEREINTRAGUNG VORBEHALTEN.
THE REPRODUCTION, DISTRIBUTION AND UTILIZATION OF THIS DOCUMENT AS WELL AS THE COMMUNICATION OF ITS CONTENTS TO OTHERS WITHOUT EXPLICID AUTHORIZATION IS PROHIBITED.
OFFENDERS WILL BE HELD LIABLE FOR THE PAYMENT OF DAMAGES. WEIDMUELLER EXCLUSIVELY RESERVES THE RIGHT TO FILE FOR PATENTS, UTILITY MODELS OR DESIGNS.
© WEIDMUELLER INTERFACE GmbH & Co.KG

Recommended wave solderding profiles

Weidmüller Interface GmbH & Co. KG
Klingenbergstraße 16
D-32758 Detmold
Germany
Fon: +49 5231 14-0
Fax: +49 5231 14-292083
www.weidmueller.com

Single Wave:

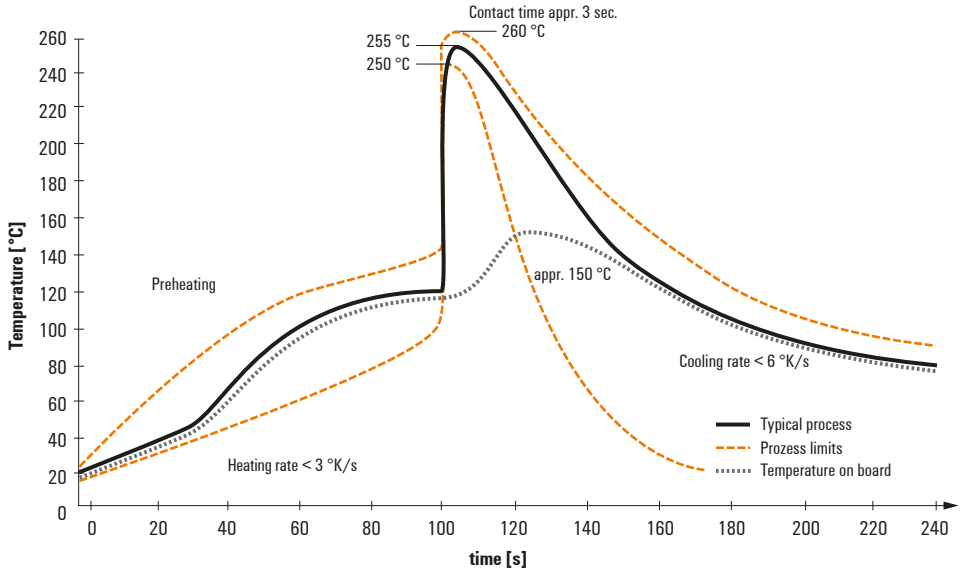

Double Wave:

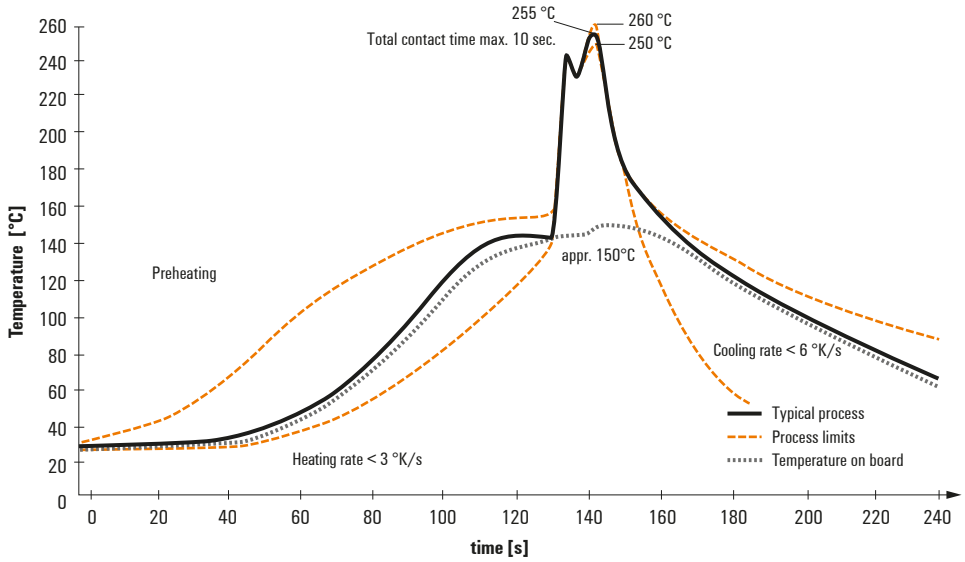

Wave soldering profiles

Wired connection elements should be processed in accordance with the DIN EN 61760-1 standard. We have included two recommendations for practical wave soldering profiles, with which Weidmüller PCB terminals and connectors are qualified.

When choosing a suitable profile for your application, the following factors also need to be considered:
- PCB thickness
- Proportion of Cu in the layers
- Single/double-sided assembly
- Product range
- Heating and cooling rates

The single and double wave profiles each indicate the recommended operating range, including the maximum soldering temperature of 260°C. In practice, the maximum soldering temperature is quite often well below the above maximum profile.

We reserve the right to make technical changes.