Klippon TB MH (Terminal Box - Multi Hinge)
KTB MH 352620 S4E0

Weidmüller Interface GmbH & Co. KG
Klingenbergstraße 26
D-32758 Detmold
Germany
Fon: +49 5231 14-0
Fax: +49 5231 14-292083
www.weidmueller.com

Product image

Abbildung ähnlich

Stainless steel enclosures for use in areas exposed to explosion hazards

The Klippon® TB enclosure range provides excellent performance characteristics, even under the most difficult environmental conditions. In addition, it complies with the stricter requirements of potentially explosive atmospheres found specifically in the process or power generation industries. The new Klippon® TB MH enclosure range offers further improvements to a product line that is already successfully leading the market..The Klippon® TB MH enclosure range has the following advantages:

- Available in 12 sizes and 3 standard depths
- Equipped with up to 4 gland plates
- The gasket is protected against compression
- Completely removable padlock tab
- Cover lock outside the sealed zone
- Improved temperature performance
- IP66/IP67 protection
- Completely removable lid – without a tool
- Earthing stud in the cover and base of the enclosure
- Welded mounting feet
- International approvals

General ordering data

Type	KTB MH 352620 S4E0
Order No.	1194850000
Version	Klippon TB MH (Terminal Box - Multi Hinge), Empty enclosure, stainless steel enclosure, Height: 350 mm, Width: 260 mm, Depth: 200 mm, Material: Stainless steel 1.4404 (316L), electropolished, silver
GTIN (EAN)	4032248977499
Qty.	1 pc(s).

Klippon TB MH (Terminal Box - Multi Hinge)
KTB MH 352620 S4E0

Weidmüller Interface GmbH & Co. KG
Klingenbergstraße 26
D-32758 Detmold
Germany
Fon: +49 5231 14-0
Fax: +49 5231 14-292083
www.weidmueller.com

Technical data

Dimensions and weights

Width	260 mm	Width (inches)	10.236 inch
Height	350 mm	Height (inches)	13.78 inch
Depth	200 mm	Depth (inches)	7.874 inch
Mounting dimension - width	286 mm	Mounting dimension - height	250 mm
Net weight	7,391 g		

Environmental Product Compliance

REACH SVHC	Lead 7439-92-1

Cable glands, left

M12	38	M16	26
M20	17	M25	14
M32	7	M40	6
M50	3	M63	2
M75	2		

Cable glands, right

M12	38	M16	26
M20	17	M25	14
M32	7	M40	6
M50	3	M63	2
M75	2		

Cable glands, top/bottom

M12	33	M16	22
M20	14	M25	12
M32	6	M40	5
M50	2	M63	2
M75	1		

Certificate numbers enclosure

Certificate no. assembled enclosure (ATEX)	IBExU14ATEX1050	Certificate no. empty enclosure (ATEX)	IBExU14ATEX1028 U
Certificate no. assembled enclosure (IECEx)	IECEXIBE14.0013	Certificate no. empty enclosure (IECEx)	IECEx IBE 14.0004U
Certificate no., assembled enclosure (EAC)	RU C-DE.ГБ08.В.01328	Certificate no., empty enclosure (EAC)	RU C-DE.ГБ08.В.00472
Certificate no. assembled enclosure (INMETRO)	IEx 17.0021	Certificate no. empty enclosure (INMETRO)	IEx 17.0020U
Certificate no. assembled enclosure (AEx)	E223792	Certificate no. empty enclosure (NEPSI)	GYJ14.1308U
Certificate no. assembled enclosure (NEPSI)	GYJ14.1309	Certificate no., assembled enclosure (KOSHA)	16-AV4BO-0245X
Certificate No. (MARITREG)	15.40073.250	Certificate no. (cULus)	E243298
Certificate No. (CCOE)	P461058_1		

Klippon TB MH (Terminal Box - Multi Hinge)
KTB MH 352620 S4E0

Weidmüller Interface GmbH & Co. KG
Klingenbergstraße 26
D-32758 Detmold
Germany
Fon: +49 5231 14-0
Fax: +49 5231 14-292083
www.weidmueller.com

Technical data

General information

AF size 1	10 mm	Access opening: height	297 mm
Access opening: width	201 mm	Areas of use	Explosive risk zone, Process industry, Oil and gas industry, Chemical industry, Offshore, Onshore
Installation advice	Terminal rail / mounting plate	Material thickness	1.5 mm
Material thickness of cover	1.5 mm	Material thickness of flange	3 mm
Max. payload	36 kg	Opening angle lid	130 °
Overall dimensions	350 x 311 x 215	Position PE bolts	Page C
Standards	DIN EN 62208 - Empty enclosure standard, DIN EN 61373 Class 1B**, DIN EN 15085-2, EN 60079-0, EN 60079-7, EN 60079-31, IEC 60079-0, IEC 60079-7, IEC 60079-31	Torque for lid screws	2.5 Nm
Material	Stainless steel 1.4404 (316L)	Seal material	Silicone
Surface finish	electropolished	Operating temperature, min.	-60 °C
Operating temperature, max.	135 °C	Impact resistance	7 J ATEX version, 10 J version standard
Protection degree	IP66, IP67	Note: protection class	If used in temperature ranges above 105 °C, IP protection is limited to IP 66.
Enclosure attachment	4 welded-on mounting feet with 11 mm holes (2 slotted feet and 2 cross-shaped feet)	Lid attachment	4 hinges and M6 hex-head slotted screws SW10
Integral fixing	4, 6 or 9 stud bolts M6 inner (female) thread		

Housing earth

Earth, enclosure, internal	Welded-on M6 stainless-steel earth stud in enclosure body and lid.

horizontal assembly

WDU 10 / ZDU 10	2x15	WDU 16 / ZDU 16	1x12
WDU 2,5 / ZDU 2,5 / IDU 2,5	2x31	WDU 35 / ZDU 35	1x9
WDU 4 / ZDU 4	2x26	WDU 6 / ZDU 6	2x19

vertical assembly

WDU 10 / ZDU 10	1x25	WDU 16 / ZDU 16	1x20
WDU 2,5 / ZDU 2,5 / IDU 2,5	2x49	WDU 35 / ZDU 35	1x15
WDU 4 / ZDU 4	1x41	WDU 6 / ZDU 6	1x31

Classifications

ETIM 6.0	EC002503	ETIM 7.0	EC002503
eClass 9.0	27-18-05-02	eClass 9.1	27-18-05-02
eClass 10.0	27-18-05-02		

Klippon TB MH (Terminal Box - Multi Hinge)
KTB MH 352620 S4E0

Weidmüller Interface GmbH & Co. KG
Klingenbergstraße 26
D-32758 Detmold
Germany
Fon: +49 5231 14-0
Fax: +49 5231 14-292083
www.weidmueller.com

Technical data

Product information

Product information	**A customised test is required to guarantee application compliance

Approvals

Approvals	ATEX - SIRA, IECEx - IBExU, IECEx - KEMA, IECEx - PTB, INMETRO, ATEX - KEMA, ATEX - PTB
ROHS	Conform

Downloads

Approval/Certificate/Document of Conformity	Attestation of Conformity - Klippon TB Empty Enclosures - AoC DE PS261X 160309 001ISS01 EU Declaration of Conformity - Klippon TB Empty Enclosures - DoC DE PS261X 160412 001ISS01
Brochure/Catalogue	MB OVERV. PROCESS WD DE MB KLIPPON ENCL.TECN EN MB PROCESS EN FL WIND 2012 EN FL APPL PROCESS EN FL SHIPBUILDING 2016 EN FL RAILWAY 2014 EN PI KLIPPON TB MH QL EN
Engineering Data	EPLAN, WSCAD
Engineering Data	STEP
Tender specification	Klippon TB MH 352620 S4E0_1194850000_DE Klippon TB MH 352620 S4E0_1194850000_EN Klippon TB MH 352620 S4E0_1194850000_NL
User Documentation	MB KLIPPON ENCL.TECN DE Assembly guidelines - empty enclosures

Klippon TB MH (Terminal Box - Multi Hinge)
KTB MH 352620 S4E0

Weidmüller Interface GmbH & Co. KG
Klingenbergstraße 26
D-32758 Detmold
Germany
Fon: +49 5231 14-0
Fax: +49 5231 14-292083
www.weidmueller.com

Drawings

Dimensioned drawing

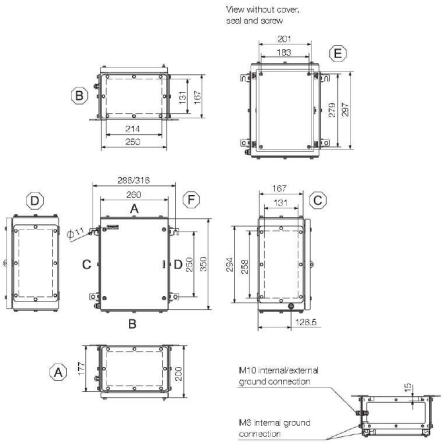

Klippon TB MH (Terminal Box - Multi Hinge)
KTB MH 352620 S4E0

Weidmüller Interface GmbH & Co. KG
Klingenbergstraße 26
D-32758 Detmold
Germany
Fon: +49 5231 14-0
Fax: +49 5231 14-292083
www.weidmueller.com

Accessories

Earthing stud

Integrate, expand and customise:
The ideal expansion for every application
The consistent structure of accessories for the new Klippon® TB enclosure range means that you can easily adapt the enclosure to the specific requirements of each application.
Earthing bolt
Earthing bolts to exchange as a complete component, in two versions – brass and stainless steel.

General ordering data

Type	PEBZ M10 KTB S4 SET	Version
Order No.	1192690000	Klippon TB (Terminal Box), Earthing stud, Miscellaneous, Material:
GTIN (EAN)	4032248974658	Stainless steel 1.4404, untreated, silver
Qty.	1 pc(s).	
Type	PEBZ M10 KTB BR SET	Version
Order No.	1192680000	Klippon TB (Terminal Box), Earthing stud, Miscellaneous, Material:
GTIN (EAN)	4032248974641	Brass, untreated, silver
Qty.	1 pc(s).	

Installation material

Integrate, expand and customise - the perfect supplement to every application
The fully structured range of system accessories for the new Klippon® TB enclosure series allows you to easily adapt the enclosures to meet the specific requirements of every application.
Mounting hardware kits
Mounting hardware kits are available for quick and easy installation of type label holders, document holders and rain hoods.
The **label fastening set – SD** is required to install a plastic (Trafolyte) ID or type label. With the aid of this set you can mount the ID or type label directly on the enclosure cover. The label fastening set has been specially developed for this purpose. Only by using this fastening set can you ensure that there will be no leaks into the enclosure or damage to the label.
The **universal fastening set – TPSD** has been developed to enable secure and quick installation of type label holders, rain covers or document holders, for example. By using this fastening set, the risk of leaks can be minimised, if not avoided.

General ordering data

Type	SD FIXING SET	Version
Order No.	1285200000	Klippon TB (Terminal Box), Identification plate fixing set, Material:
GTIN (EAN)	4050118075472	Stainless steel, rust-proof, untreated, silver
Qty.	1 pc(s).	

Klippon TB MH (Terminal Box - Multi Hinge)
KTB MH 352620 S4E0

Weidmüller Interface GmbH & Co. KG
Klingenbergstraße 26
D-32758 Detmold
Germany
Fon: +49 5231 14-0
Fax: +49 5231 14-292083
www.weidmueller.com

Accessories

Type	TPSD FIXING SET KTB	Version
Order No.	1252190000	Klippon TB (Terminal Box), Type plate fixings set, Material: Stainless
GTIN (EAN)	4050118043969	steel, rust-proof, untreated, silver
Qty.	1 pc(s).	

Document holders

Integrate, expand and customise - the perfect supplement to every application
The fully structured range of system accessories for the new Klippon® TB enclosure series allows you to easily adapt the enclosures to meet the specific requirements of every application.
Document holders
Document holders for the proper storage of documents in the enclosure.

General ordering data

Type	DOHA KTB A6 S2 R	Version
Order No.	1252780000	Klippon TB (Terminal Box), Document holders, Riveted, Height: 110
GTIN (EAN)	4050118045512	mm, Width: 130 mm, Depth: 20 mm, Material: Stainless steel 1.4301,
Qty.	1 pc(s).	Mirror polished, silver
Type	DOHA KTB A6 S2 W	Version
Order No.	1252760000	Klippon TB (Terminal Box), Document holders, welded, Height: 110
GTIN (EAN)	4050118045130	mm, Width: 130 mm, Depth: 20 mm, Material: Stainless steel 1.4301,
Qty.	1 pc(s).	Mirror polished, silver

Mounting plates fastening

For many years, the name Klippon® has stood for competence and quality in enclosures.
The Klippon® EBi industrial enclosure series protects your components reliably if they are used in moderate environmental conditions and is designed for everyday applications.
With the ever-increasing need for individual application solutions, the Klippon® EBi with its high degree of protection and impact resistance is ideally suited to your needs.
Our standard product is the Klippon® EBi QL – with hinged door and double-bit key lock.
A variant with mounting screws is also available, but is only manufactured on request and is subject to a minimum order quantity. DNV GL and cULus approvals are also available on request.

General ordering data

Type	GFSC M5X10 TX20 SET	Version
Order No.	1274150000	Klippon EBi (Essential Box industrial), Mounting screw, silver
GTIN (EAN)	4050118063820	
Qty.	1 pc(s).	

Klippon TB MH (Terminal Box - Multi Hinge)
KTB MH 352620 S4E0

Weidmüller Interface GmbH & Co. KG
Klingenbergstraße 26
D-32758 Detmold
Germany
Fon: +49 5231 14-0
Fax: +49 5231 14-292083
www.weidmueller.com

Accessories

Stainless steel 1.4301

Integrate, expand and customise:
The ideal expansion for every application
The consistent structure of accessories for the new Klippon® TB enclosure range means that you can easily adapt the enclosure to the specific requirements of each application.
Rain Covers
The rain cover provides an ideal, additional level of protection for the enclosure if it is installed in unusual climatic zones with, for instance, very heavy rainfall or extreme levels of direct sunlight.

General ordering data

Type	KTB RNHD 352620 R	Version
Order No.	1281420000	Klippon TB (Terminal Box), Rain hood, Height: 55.9 mm, Width: 265
GTIN (EAN)	4050118072099	mm, Depth: 211.2 mm, Material: Stainless steel 1.4301, Mirror
Qty.	1 pc(s).	polished, silver

TS 35

Integrate, expand and customise - the perfect supplement to every application
The fully structured range of system accessories for the new Klippon® TB enclosure series allows you to easily adapt the enclosures to meet the specific requirements of every application.
The following options are available:
- Document holders
- Flange plates
- Mounting plates
- Locking systems
- Type label holders
- Rain hoods
- Earthing studs

General ordering data

Type	TS35X7.5 ST KTB3526 VER	Version
Order No.	8000006711	Rail, TS 35, TS 35 x 7.5, Length: 295 mm, without slot, Steel,
GTIN (EAN)	4050118652840	galvanized, chromium-plated
Qty.	20 pc(s).	
Type	TS35X7.5 ST KTB3526 HOR	Version
Order No.	8000006721	Rail, TS 35, TS 35 x 7.5, Length: 199 mm, without slot, Steel,
GTIN (EAN)	4050118652895	galvanized, chromium-plated
Qty.	20 pc(s).	

Klippon TB MH (Terminal Box - Multi Hinge)
KTB MH 352620 S4E0

Weidmüller Interface GmbH & Co. KG
Klingenbergstraße 26
D-32758 Detmold
Germany
Fon: +49 5231 14-0
Fax: +49 5231 14-292083
www.weidmueller.com

Accessories

350 x 260mm

Integrate, expand and customise:
The ideal expansion for every application
The consistent structure of accessories for the new Klippon® TB enclosure range means that you can easily adapt the enclosure to the specific requirements of each application.
Mounting plates
Mounting plates, with and without hole patterns,for longitudinal and transverse mounting of DIN mounting rails or components directly onto the mounting plate.

General ordering data

Type	KTB MOPL 3526 S2N H	Version
Order No.	1257680000	Klippon TB (Terminal Box), Mounting plate, prepunched, Height: 295
GTIN (EAN)	4050118049282	mm, Width: 199 mm, Depth: 1.5 mm, Material: Stainless steel 1.4301
Qty.	1 pc(s).	(304), untreated, silver
Type	KTB MOPL 3526 MSZN	Version
Order No.	1193970000	Klippon TB (Terminal Box), Mounting plate, Height: 295 mm, Width:
GTIN (EAN)	4050118028577	199 mm, Depth: 1.5 mm, Material: Sheet steel, galvanized, silver
Qty.	1 pc(s).	
Type	KTB MOPL 3526 S2N	Version
Order No.	1193840000	Klippon TB (Terminal Box), Mounting plate, Height: 295 mm, Width:
GTIN (EAN)	4050118028447	199 mm, Depth: 1.5 mm, Material: Stainless steel 1.4301 (304),
Qty.	1 pc(s).	untreated, silver
Type	KTB MOPL 3526 MSZN H	Version
Order No.	2022310000	Klippon TB (Terminal Box), Mounting plate, prepunched, Height:
GTIN (EAN)	4050118403633	295 mm, Width: 199 mm, Depth: 1.5 mm, Material: Sheet steel,
Qty.	1 pc(s).	galvanized, silver

Ratings plate holder

Integrate, expand and customise:
The ideal expansion for every application
The consistent structure of accessories for the new Klippon® TB enclosure range means that you can easily adapt the enclosure to the specific requirements of each application.
Nameplate holders
There are a variety of designed label holders available for prominent display as required and for additional nameplates as needed.

General ordering data

Type	TPSDHA KTB 70X70M3 S2 R	Version
Order No.	1279320000	Klippon TB (Terminal Box), Ratings plate holder, Riveted, Height: 70
GTIN (EAN)	4050118070101	mm, Width: 70 mm, Depth: 20 mm, Material: Stainless steel 1.4301,
Qty.	1 pc(s).	Mirror polished, silver

Klippon TB MH (Terminal Box - Multi Hinge)
KTB MH 352620 S4E0

Weidmüller Interface GmbH & Co. KG
Klingenbergstraße 26
D-32758 Detmold
Germany
Fon: +49 5231 14-0
Fax: +49 5231 14-292083
www.weidmueller.com

Accessories

Type	TPSDHA KTB 100X25 S2 2R	Version
Order No.	1257640000	Klippon TB (Terminal Box), Ratings plate holder, Riveted, Height:
GTIN (EAN)	4050118070354	25 mm, Width: 141 mm, Depth: 16.5 mm, Material: Stainless steel
Qty.	1 pc(s).	1.4301, Mirror polished, silver
Type	TPSDHA KTB 130X50 S2 R	Version
Order No.	1283450000	Klippon TB (Terminal Box), Ratings plate holder, Riveted, Height:
GTIN (EAN)	4050118073621	50 mm, Width: 171 mm, Depth: 16.5 mm, Material: Stainless steel
Qty.	1 pc(s).	1.4301, Mirror polished, silver

Stainless steel 1.4404 (316L)

Integrate, expand and customise:
The ideal expansion for every application
The consistent structure of accessories for the new Klippon® TB enclosure range means that you can easily adapt the enclosure to the specific requirements of each application.
Rain Covers
The rain cover provides an ideal, additional level of protection for the enclosure if it is installed in unusual climatic zones with, for instance, very heavy rainfall or extreme levels of direct sunlight.

General ordering data

Type	KTB RNHD 352620 S4E R	Version
Order No.	1314150000	Klippon TB (Terminal Box), Rain hood, Height: 55.9 mm, Width: 265
GTIN (EAN)	4050118117516	mm, Depth: 211.2 mm, Material: Stainless steel 1.4404 (316L),
Qty.	1 pc(s).	electropolished, silver