TERMSERIES
TRS 48VUC 2CO AU

Weidmüller Interface GmbH & Co. KG
Klingenbergstraße 26
D-32758 Detmold
Germany
Fon: +49 5231 14-0
Fax: +49 5231 14-292083
www.weidmueller.com

Product image

Similar to illustration

TERMSERIES relay module, complete modules consisting of
a relay and a base with AC/DC/UC coils,
available in different versions:

- With screw and tension-clamp connection
- AgNi contact, optionally with hard gold-plated contacts
- 1 and 2 COs
- Optionally with multiple-voltage input: 24...230 V UC
- With various protective circuits
  in the input (free-wheel diode, RC element)
- Illuminated ejection lever

General ordering data

Type	TRS 48VUC 2CO AU
Order No.	1123750000
Version	TERMSERIES, Relay module, Number of contacts: 2 CO contact AgNi 5µm Au, Rated control voltage: 48 V UC ±10 %, Continuous current: 8 A, Screw connection
GTIN (EAN)	4032248905577
Qty.	10 pc(s).

Creation date May 1, 2020 9:55:26 PM CEST

TERMSERIES
TRS 48VUC 2CO AU

Weidmüller Interface GmbH & Co. KG
Klingenbergstraße 26
D-32758 Detmold
Germany
Fon: +49 5231 14-0
Fax: +49 5231 14-292083
www.weidmueller.com

Technical data

Dimensions and weights

Width	12.8 mm	Width (inches)	0.504 inch
Height	89.6 mm	Height (inches)	3.528 inch
Depth	87.8 mm	Depth (inches)	3.457 inch
Net weight	54.5 g		

Temperatures

Humidity	5-95% relative humidity, T_u = 40°C, without condensation	Operating temperature, max.	60 °C
Operating temperature, min.	-40 °C	Storage temperature, max.	85 °C
Storage temperature, min.	-40 °C	Operating temperature	-40 °C...60 °C
Storage temperature	-40 °C...85 °C		

Environmental Product Compliance

REACH SVHC	Lead 7439-92-1

Rated data UL

Ambient temperature (operational), max.	60 °C	Connection cross-section AWG, min.	AWG 26
Connection cross-section AWG, max.	AWG 14	Type of conductor	rigid copper conductor, flexible copper conductor
Tightening torque, max.	0.4 Nm	Pollution severity level	2
Altitude	≤ 2000 m, above sea level		

Input

Rated control voltage	48 V UC ± 10 %	Rated current AC	9 mA
Rated current DC	7 mA	Power rating	340 mW / 0.4 VA
Pull-in/drop-out voltage, typ.	29 V / 11 V AC 33 V / 11 V DC	Pull-in/drop-out current, typ.	6 mA / 3 mA AC 5 mA / 1.5 mA DC
Status indicator	Green LED	Protective circuit	Rectifier
Coil voltage of the replacement relay deviating from the rated control voltage	Yes	Coil voltage of the replacement relay	48 V DC

Output

Rated switching voltage	250 V AC	Max. switching voltage, AC	250 V
Max. switching voltage, DC	250 V	Continuous current	8 A
Inrush current	15 A / 4 s	AC switching capacity (resistive), max.	2000 VA
DC switching capacity (resistive), max.	192 W @ 24 V	Switch-on delay	< 11 ms
Switch-off delay	< 7 ms	Min. switching power	1 mA @ 1 V
Max. switching frequency at rated load	0.1 Hz		

Contact data

Contact type	2 CO contact (AgNi 5µm Au)	Mechanical service life	30 x 10^6 switching cycles

General data

Rail	TS 35	Test button	No
Mechanical switch position indicator	No	Colour	black
UL 94 flammability rating	V-0		

TERMSERIES
TRS 48VUC 2CO AU

Weidmüller Interface GmbH & Co. KG
Klingenbergstraße 26
D-32758 Detmold
Germany
Fon: +49 5231 14-0
Fax: +49 5231 14-292083
www.weidmueller.com

Technical data

Insulation coordination

Rated voltage	300 V	Surge voltage category	III
Pollution severity	2	Protection degree	IP20
Dielectric strength, Input/Output	1.2 kV_{eff} / 5 s	Creepage and clearance distance input – output	≥ 5.5 mm
Dielectric strength of neighbouring contacts	2.5 kV_{eff}	Dielectric strength of open contact	1 kV_{eff} / 1 min
Dielectric strength to mounting rail	4 kV_{eff} / 1 Min.	Impulse withstand voltage	6 kV (1.2/50 µs)

Further details of approvals / standards

Standards	EN 50178, EN 55011, EN 61000-6-1, 2, 4	Certificate No. (DNVGL)	TAA00001E5
Certificate no. (cULus)	E141197		

Connection data

Wire connection method	Screw connection	Stripping length, rated connection	8 mm
Tightening torque, max.	0.4 Nm	Clamping range, rated connection	1.5 mm²
Clamping range, min.	0.14 mm²	Clamping range, max.	2.5 mm²
Wire connection cross section AWG, min.	AWG 26	Wire connection cross section AWG, max.	AWG 14
Wire cross-section, solid, min.	0.14 mm²	Wire cross-section, solid, max.	2.5 mm²
Wire connection cross-section, finely stranded, min.	0.14 mm²	Wire connection cross section, finely stranded, max.	2.5 mm²
Wire cross-section, finely stranded, min. (AWG)	AWG 26	Wire cross-section, finely stranded, max. (AWG)	AWG 14
Wire connection cross-section, finely stranded with wire-end ferrules DIN 46228/4, min.	0.25 mm²	Wire connection cross-section, finely stranded with wire-end ferrules DIN 46228/4, max.	2.5 mm²
Conductor cross-section, flexible, AEH (DIN 46228-1), min.	0.25 mm²	Conductor cross-section, flexible, AEH (DIN 46228-1), max.	2.5 mm²
Wire connection cross section, finely stranded, two clampable wires, min.	0.5 mm²	Wire cross-section, finely stranded, two clampable wires, max.	1 mm²
Twin wire-end ferrules, min.	0.5 mm²	Twin wire-end ferrules, max.	1 mm²
Blade size	size PH0	Gauge to IEC 60947-1	A1, B1

Classifications

ETIM 6.0	EC001437	ETIM 7.0	EC001437
eClass 9.0	27-37-16-01	eClass 9.1	27-37-16-01
eClass 10.0	27-37-16-01		

Approvals

Approvals	
ROHS	Conform

TERMSERIES
TRS 48VUC 2CO AU

Weidmüller Interface GmbH & Co. KG
Klingenbergstraße 26
D-32758 Detmold
Germany
Fon: +49 5231 14-0
Fax: +49 5231 14-292083
www.weidmueller.com

Technical data

Downloads

Approval/Certificate/Document of Conformity	EU Konformitätserklärung / EU Declaration of Conformity
Brochure/Catalogue	CAT 4.2 ELECTR 18/19 EN
Engineering Data	EPLAN, WSCAD, Zuken E3.S
Engineering Data	STEP
User Documentation	Beipackzettel / Package Insert – multilingual

TERMSERIES
TRS 48VUC 2CO AU

Weidmüller Interface GmbH & Co. KG
Klingenbergstraße 26
D-32758 Detmold
Germany
Fon: +49 5231 14-0
Fax: +49 5231 14-292083
www.weidmueller.com

Drawings

Wiring diagram

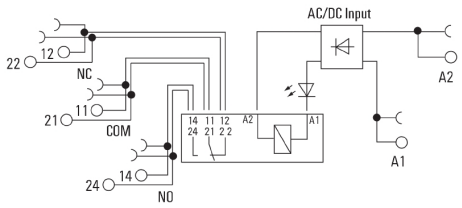

Graph

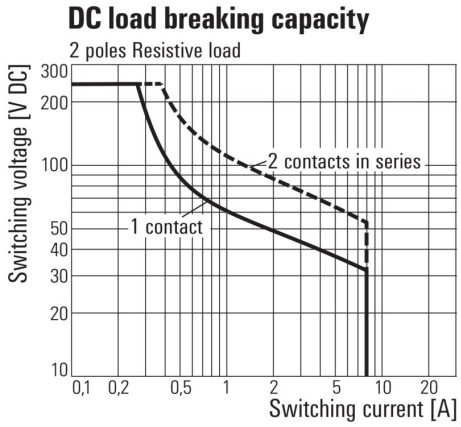

DC load limit curve
Resistive load

Graph

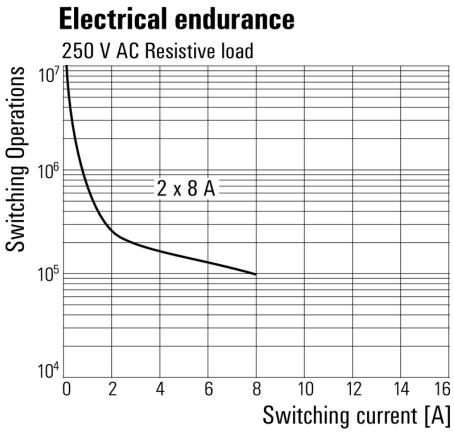

Electrical service life230 V AC resistive load
230 V AC resistive load

Dimensional drawing

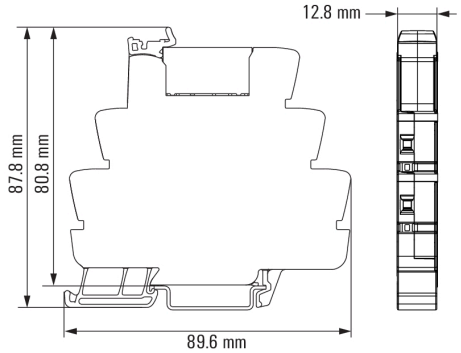

TERMSERIES
TRS 48VUC 2CO AU

Weidmüller Interface GmbH & Co. KG
Klingenbergstraße 26
D-32758 Detmold
Germany
Fon: +49 5231 14-0
Fax: +49 5231 14-292083
www.weidmueller.com

Accessories

Supply module

TERMSERIES accessories include:
- Spare relay
- Base
- Partition plates
- Cross-connections
- Power-feed modules

General ordering data

Type	TXS SUPPLY	Version
Order No.	1240780000	TERMSERIES, Supply module, Number of contacts: 5, Continuous
GTIN (EAN)	4050118028140	current: 10 A, Screw connection
Qty.	10 pc(s).	
Type	TXZ SUPPLY	Version
Order No.	1240790000	TERMSERIES, Supply module, Number of contacts: 5, Continuous
GTIN (EAN)	4050118028164	current: 10 A, Tension-clamp connection
Qty.	10 pc(s).	
Type	TXP SUPPLY	Version
Order No.	2618940000	TERMSERIES, Supply module, Number of contacts: 5, Continuous
GTIN (EAN)	4050118667592	current: 10 A, PUSH IN with actuator
Qty.	10 pc(s).	

Slotted screwdriver

Slotted screwdriver with rounded blade SD DIN 5265, ISO 2380/2, output to DIN 5264, ISO 2380/1. ChromTop tip, SoftFinish grip

General ordering data

Type	SDS 0.6X3.5X100	Version
Order No.	9008330000	Screwdriver, Blade width (B): 3.5 mm, Blade length: 100 mm, Blade
GTIN (EAN)	4032248056286	thickness (A): 0.6 mm
Qty.	1 pc(s).	

TERMSERIES
TRS 48VUC 2CO AU

Weidmüller Interface GmbH & Co. KG
Klingenbergstraße 26
D-32758 Detmold
Germany
Fon: +49 5231 14-0
Fax: +49 5231 14-292083
www.weidmueller.com

Accessories

Blank

WS markers are the perfect match for the W-series connectors. Thanks to their system compatibility, the WS tags can also be used with the I-series and the Z-series. The large marking surfaces do not only permit long character strings but also multi-line text.
WS markers are ideal for labels with long, customised character strings. Thanks to the proven MultiCard format, printing with laser printer, PrintJet ADVANCED, plotter or MC-Mobilo is possible.
- Can be fitted in strips or individually
- Markers in proven MultiCard format

For custom printing: Please send us a file of our labeling software M-Print PRO or M-Print PRO Online (without installation) for your labeling specifications.

General ordering data

Type	WS 10/6 M MC NE WS	Version
Order No.	1818400000	WS, Terminal marker, 10 x 6 mm, Pitch in mm (P): 6.00 Weidmueller,
GTIN (EAN)	4032248310876	Allen-Bradley, white
Qty.	600 pc(s).	

Cross-connector

TERMSERIES accessories include:
- Spare relay
- Base
- Partition plates
- Cross-connections
- Power-feed modules

General ordering data

Type	TCC 6.4/51 RD	Version
Order No.	2556410000	TERMSERIES, Cross-connector
GTIN (EAN)	4050118566925	
Qty.	10 pc(s).	
Type	ZQV 1.5N/R6.4/19 RT	Version
Order No.	1391610000	TERMSERIES, Cross-connector
GTIN (EAN)	4050118191783	
Qty.	10 pc(s).	
Type	TCC 12.8/26 RD	Version
Order No.	2556420000	TERMSERIES, Cross-connector
GTIN (EAN)	4050118566932	
Qty.	10 pc(s).	
Type	TCC 6.4/2 RD	Version
Order No.	2556390000	TERMSERIES, Cross-connector
GTIN (EAN)	4050118566901	
Qty.	10 pc(s).	

TERMSERIES
TRS 48VUC 2CO AU

Weidmüller Interface GmbH & Co. KG
Klingenbergstraße 26
D-32758 Detmold
Germany
Fon: +49 5231 14-0
Fax: +49 5231 14-292083
www.weidmueller.com

Accessories

Type	TCC 6.4/51 OR	Version
Order No.	2556370000	TERMSERIES, Cross-connector
GTIN (EAN)	4050118566680	
Qty.	10 pc(s).	
Type	ZQV 1.5N/R6.4/2 RT	Version
Order No.	1446090000	TERMSERIES, Cross-connector
GTIN (EAN)	4050118250886	
Qty.	10 pc(s).	
Type	ZQV 1.5N/R6.4/10 GE	Version
Order No.	1193680000	TERMSERIES, Cross-connector
GTIN (EAN)	4032248976454	
Qty.	10 pc(s).	
Type	TCC 6.4/2 OR	Version
Order No.	2556350000	TERMSERIES, Cross-connector
GTIN (EAN)	4050118566826	
Qty.	10 pc(s).	
Type	ZQV 1.5N/R6.4/2 GE	Version
Order No.	1193670000	TERMSERIES, Cross-connector
GTIN (EAN)	4032248976638	
Qty.	10 pc(s).	
Type	TCC 6.4/10 OR	Version
Order No.	2556360000	TERMSERIES, Cross-connector
GTIN (EAN)	4050118566673	
Qty.	10 pc(s).	
Type	ZQV 1.5N/R6.4/19 SW	Version
Order No.	1391600000	TERMSERIES, Cross-connector
GTIN (EAN)	4050118191806	
Qty.	10 pc(s).	
Type	TCC 12.8/26 OR	Version
Order No.	2556380000	TERMSERIES, Cross-connector
GTIN (EAN)	4050118566697	
Qty.	10 pc(s).	
Type	TCC 6.4/10 RD	Version
Order No.	2556400000	TERMSERIES, Cross-connector
GTIN (EAN)	4050118566918	
Qty.	10 pc(s).	
Type	ZQV 1.5N/R6.4/19 GE	Version
Order No.	1193690000	TERMSERIES, Cross-connector
GTIN (EAN)	4032248976645	
Qty.	10 pc(s).	
Type	TCC 6.4/10 BK	Version
Order No.	2556480000	TERMSERIES, Cross-connector
GTIN (EAN)	4050118566994	
Qty.	10 pc(s).	
Type	ZQV 1.5N/R6.4/19 BL	Version
Order No.	1391620000	TERMSERIES, Cross-connector
GTIN (EAN)	4050118191813	
Qty.	10 pc(s).	
Type	ZQV 1.5N/R6.4/10 RT	Version
Order No.	1391640000	TERMSERIES, Cross-connector
GTIN (EAN)	4050118191660	
Qty.	10 pc(s).	

TERMSERIES
TRS 48VUC 2CO AU

Weidmüller Interface GmbH & Co. KG
Klingenbergstraße 26
D-32758 Detmold
Germany
Fon: +49 5231 14-0
Fax: +49 5231 14-292083
www.weidmueller.com

Accessories

Type	TCC 6.4/2 BK	Version
Order No.	2556470000	TERMSERIES, Cross-connector
GTIN (EAN)	4050118566987	
Qty.	10 pc(s).	
Type	ZQV 1.5N/R6.4/10 SW	Version
Order No.	1391630000	TERMSERIES, Cross-connector
GTIN (EAN)	4050118191776	
Qty.	10 pc(s).	
Type	TCC 12.8/26 BL	Version
Order No.	2556460000	TERMSERIES, Cross-connector
GTIN (EAN)	4050118566970	
Qty.	10 pc(s).	
Type	TCC 6.4/2 BL	Version
Order No.	2556430000	TERMSERIES, Cross-connector
GTIN (EAN)	4050118566949	
Qty.	10 pc(s).	
Type	TCC 6.4/10 BL	Version
Order No.	2556440000	TERMSERIES, Cross-connector
GTIN (EAN)	4050118566956	
Qty.	10 pc(s).	
Type	TCC 12.8/26 BK	Version
Order No.	2556500000	TERMSERIES, Cross-connector
GTIN (EAN)	4050118567014	
Qty.	10 pc(s).	
Type	ZQV 1.5N/R6.4/2 BL	Version
Order No.	1446140000	TERMSERIES, Cross-connector
GTIN (EAN)	4050118251074	
Qty.	10 pc(s).	
Type	TCC 6.4/51 BK	Version
Order No.	2556490000	TERMSERIES, Cross-connector
GTIN (EAN)	4050118567007	
Qty.	10 pc(s).	
Type	ZQV 1.5N/R6.4/2 SW	Version
Order No.	1446040000	TERMSERIES, Cross-connector
GTIN (EAN)	4050118251067	
Qty.	10 pc(s).	
Type	ZQV 1.5N/R6.4/10 BL	Version
Order No.	1390350000	TERMSERIES, Cross-connector
GTIN (EAN)	4050118190793	
Qty.	10 pc(s).	
Type	TCC 6.4/51 BL	Version
Order No.	2556450000	TERMSERIES, Cross-connector
GTIN (EAN)	4050118566963	
Qty.	10 pc(s).	

TERMSERIES
TRS 48VUC 2CO AU

Weidmüller Interface GmbH & Co. KG
Klingenbergstraße 26
D-32758 Detmold
Germany
Fon: +49 5231 14-0
Fax: +49 5231 14-292083
www.weidmueller.com

Accessories

Crosshead screwdriver Phillips

Crosshead screwdriver, Phillips, SDK PH DIN 5262, ISO 8764/2-PH, output to ISO 8764-PH, ChromTop tip, SoftFinish grip

General ordering data

Type	SDK PH0	Version
Order No.	9008470000	Screwdriver, Blade width (B): 3 mm, Blade length: 60 mm
GTIN (EAN)	4032248056460	
Qty.	1 pc(s).	

Partition plate

TERMSERIES accessories include:
- Spare relay
- Base
- Partition plates
- Cross-connections
- Power-feed modules

General ordering data

Type	TW TXS/TXZ R3.2	Version
Order No.	1240800000	TERMSERIES, Seperation plate
GTIN (EAN)	4050118028188	
Qty.	10 pc(s).	

TERMSERIES
TRS 48VUC 2CO AU

Weidmüller Interface GmbH & Co. KG
Klingenbergstraße 26
D-32758 Detmold
Germany
Fon: +49 5231 14-0
Fax: +49 5231 14-292083
www.weidmueller.com

Accessories

Crosshead screwdriver Phillips

VDE insulated crosshead screwdriver, for Phillips screws, SDIK PH DIN 7438, ISO 8764/2-PH, output to ISO 8764-PH, SoftFinish grip

General ordering data

Type	SDIK PH0	Version
Order No.	9008560000	Screwdriver, Blade length: 60 mm
GTIN (EAN)	4032248056552	
Qty.	1 pc(s).	

Blank

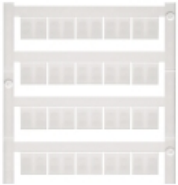

WS markers are the perfect match for the W-series connectors. Thanks to their system compatibility, the WS tags can also be used with the I-series and the Z-series. The large marking surfaces do not only permit long character strings but also multi-line text.
WS markers are ideal for labels with long, customised character strings. Thanks to the proven MultiCard format, printing with laser printer, PrintJet ADVANCED, plotter or MC-Mobilo is possible.
- Can be fitted in strips or individually
- Markers in proven MultiCard format

For custom printing: Please send us a file of our labeling software M-Print PRO or M-Print PRO Online (without installation) for your labeling specifications.

General ordering data

Type	WS 10/12 MC NE WS	Version
Order No.	1905970000	WS, Terminal marker, 10 x 12 mm, Pitch in mm (P): 12.00
GTIN (EAN)	4032248528127	Weidmueller, white
Qty.	300 pc(s).	

TERMSERIES
TRS 48VUC 2CO AU

Weidmüller Interface GmbH & Co. KG
Klingenbergstraße 26
D-32758 Detmold
Germany
Fon: +49 5231 14-0
Fax: +49 5231 14-292083
www.weidmueller.com

Accessories

Slotted screwdriver

VDE insulated screwdriver sets, for working on live parts up to 1000 V AC and 1500 V DC, DIN EN 60900. IEC 900. Each piece is "GS" safety tested. Blade made from fully hardened, high-alloy chromium-vanadium-molybdenum steel, gun-metal finish.

General ordering data

Type	SDIS SL 0.6X3.5X100	Version
Order No.	1274660000	Mounting tool, Blade width (B): 3.5 mm, Blade length: 100 mm, Blade
GTIN (EAN)	4050118072631	thickness (A): 0.6 mm
Qty.	1 pc(s).	

TERMSERIES
TRS 48VUC 2CO AU

Weidmüller Interface GmbH & Co. KG
Klingenbergstraße 26
D-32758 Detmold
Germany
Fon: +49 5231 14-0
Fax: +49 5231 14-292083
www.weidmueller.com

Drawings

Miscellaneous

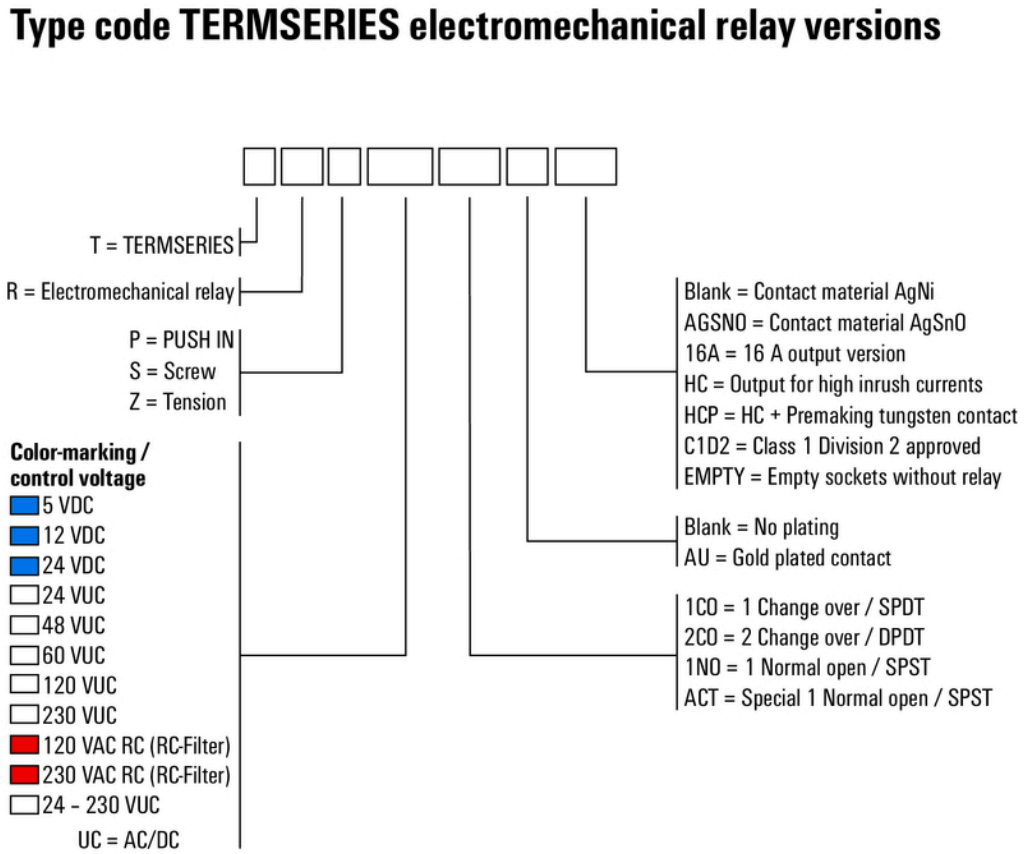

Type codes