OMNIMATE Power - series BV/SV 7.62HP
BVF 7.62HP/02/180 BCF/06R SN BK BX

Weidmüller Interface GmbH & Co. KG
Klingenbergstraße 26
D-32758 Detmold
Germany
Fon: +49 5231 14-0
Fax: +49 5231 14-292083
www.weidmueller.com

Product image

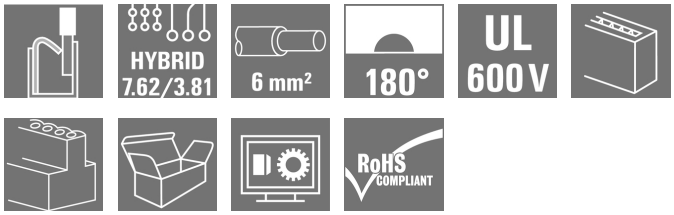

Similar to illustration

180° female plug with energy and signal contacts in PUSH IN wire connection in 7.62 pitch.
Fulfils the IEC 61800-5-1 requirement and for the energy contact UL 1059 ClassC 600 V.

General ordering data

Type	BVF 7.62HP/02/180 BCF/06R SN BK BX
Order No.	1080320000
Version	PCB plug-in connector, female plug, 7.62 mm, Number of poles: 2, 180°, PUSH IN, Clamping range, max. : 10 mm², Box
GTIN (EAN)	4032248842742
Qty.	55 pc(s).
Product data	IEC: 1000 V / 38 A / 0.5 - 10 mm² UL: 600 V / 35 A / AWG 24 - AWG 8
Packaging	Box

Creation date May 1, 2020 5:09:26 PM CEST

OMNIMATE Power - series BV/SV 7.62HP
BVF 7.62HP/02/180 BCF/06R SN BK BX

Weidmüller Interface GmbH & Co. KG
Klingenbergstraße 26
D-32758 Detmold
Germany
Fon: +49 5231 14-0
Fax: +49 5231 14-292083
www.weidmueller.com

Technical data

Dimensions and weights

Net weight	16.345 g

System Parameters

Product family	OMNIMATE Power - series BV/SV 7.62HP	Type of connection	Field connection
Wire connection method	PUSH IN	Pitch in mm (P)	7.62 mm
Pitch in inches (P)	0.3 inch	Conductor outlet direction	180°
Number of poles	2	L1 in mm	7.62 mm
L1 in inches	0.3 inch	Number of rows	1
Pin series quantity	1	Rated cross-section	6 mm²
Touch-safe protection acc. to DIN VDE 57 106	Safe from finger touch	Touch-safe protection acc. to DIN VDE 0470	IP 20
Volume resistance	4.50 mΩ	Can be coded	Yes
Stripping length	12 mm	Screwdriver blade	0.6 x 3.5
Plugging cycles	25	Plugging force/pole, max.	17 N
Pulling force/pole, max.	15 N		

Material data

Insulating material	PA GF	Colour	black
Material of operational elements	PPA GF	Colour chart (similar)	RAL 9011
Insulating material group	II	Comparative Tracking Index (CTI)	≥ 500
Insulation strength	≥ 10^8 Ω	UL 94 flammability rating	V-0
GWFI	960 °C	Contact material	Copper alloy
Contact surface	tinned	Layer structure of plug contact	6-8 µm Sn glossy
Storage temperature, min.	-25 °C	Storage temperature, max.	50 °C
Max. relative humidity during storage	70 %	Operating temperature, min.	-50 °C
Operating temperature, max.	125 °C	Temperature range, installation, min.	-25 °C
Temperature range, installation, max.	125 °C		

Conductors suitable for connection

Clamping range, min.	0.5 mm²
Clamping range, max.	10 mm²
Solid, min. H05(07) V-U	0.5 mm²
Solid, max. H05(07) V-U	10 mm²
Stranded, max. H07V-R	10 mm²
Flexible, min. H05(07) V-K	0.5 mm²
Flexible, max. H05(07) V-K	10 mm²
w. plastic collar ferrule, DIN 46228 pt 4, min.	1.5 mm²
w. plastic collar ferrule, DIN 46228 pt 4, max.	6 mm²
w. wire end ferrule, DIN 46228 pt 1, min.	1.5 mm²
w. wire end ferrule, DIN 46228 pt 1, max.	10 mm²

OMNIMATE Power - series BV/SV 7.62HP
BVF 7.62HP/02/180 BCF/06R SN BK BX

Weidmüller Interface GmbH & Co. KG
Klingenbergstraße 26
D-32758 Detmold
Germany
Fon: +49 5231 14-0
Fax: +49 5231 14-292083
www.weidmueller.com

Technical data

Clampable conductor	Cross-section for conductor connection	Type	fine-wired	
		nominal	0.5 mm²	
	wire end ferrule	Stripping length	nominal	14 mm
		Recommended wire-end ferrule	H0,5/18 OR	
	Cross-section for conductor connection	Type	fine-wired	
		nominal	1 mm²	
	wire end ferrule	Stripping length	nominal	15 mm
		Recommended wire-end ferrule	H1,0/18 GE	
	Cross-section for conductor connection	Type	fine-wired	
		nominal	1.5 mm²	
	wire end ferrule	Stripping length	nominal	15 mm
		Recommended wire-end ferrule	H1,5/18D SW	
		Stripping length	nominal	12 mm
		Recommended wire-end ferrule	H1,5/12	
	Cross-section for conductor connection	Type	fine-wired	
		nominal	0.75 mm²	
	wire end ferrule	Stripping length	nominal	14 mm
		Recommended wire-end ferrule	H0,75/18 W	
	Cross-section for conductor connection	Type	fine-wired	
		nominal	2.5 mm²	
	wire end ferrule	Stripping length	nominal	14 mm
		Recommended wire-end ferrule	H2,5/19D BL	
		Stripping length	nominal	12 mm
		Recommended wire-end ferrule	H2,5/12	
	Cross-section for conductor connection	Type	fine-wired	
		nominal	4 mm²	
	wire end ferrule	Stripping length	nominal	12 mm
		Recommended wire-end ferrule	H4,0/12	
		Stripping length	nominal	14 mm
		Recommended wire-end ferrule	H4,0/20D GR	
	Cross-section for conductor connection	Type	fine-wired	
		nominal	6 mm²	
	wire end ferrule	Stripping length	nominal	14 mm
		Recommended wire-end ferrule	H6,0/20 SW	
		Stripping length	nominal	12 mm
		Recommended wire-end ferrule	H6,0/12	
	Cross-section for conductor connection	Type	fine-wired	
		nominal	10 mm²	
	wire end ferrule	Stripping length	nominal	12 mm
		Recommended wire-end ferrule	H10,0/12	
Reference text	The outside diameter of the plastic collar should not be larger than the pitch (P), Length of ferrules is to be chosen depending on the product and the rated voltage.			
Max. clamping range	10 mm²			

OMNIMATE Power - series BV/SV 7.62HP
BVF 7.62HP/02/180 BCF/06R SN BK BX

Weidmüller Interface GmbH & Co. KG
Klingenbergstraße 26
D-32758 Detmold
Germany
Fon: +49 5231 14-0
Fax: +49 5231 14-292083
www.weidmueller.com

Technical data

Rated data acc. to IEC

tested acc. to standard	IEC 60664-1, IEC 61984	Rated current, min. number of poles (Tu=20°C)	38 A
Rated current, max. number of poles (Tu=20°C)	38 A	Rated current, min. number of poles (Tu=40°C)	34 A
Rated current, max. number of poles (Tu=40°C)	34 A	Rated voltage for surge voltage class / pollution degree II/2	1,000 V
Rated voltage for surge voltage class / pollution degree III/2	1,000 V	Rated voltage for surge voltage class / pollution degree III/3	800 V
Rated impulse voltage for surge voltage class/ pollution degree II/2	6 kV	Rated impulse voltage for surge voltage class/ pollution degree III/2	8 kV
Rated impulse voltage for surge voltage class/ contamination degree III/3	8 kV	Short-time withstand current resistance	3 x 1s with 420 A
Clearance, min.	10.4 mm	Creepage distance, min.	12.7 mm

Rated data acc. to CSA

Institute (CSA)		Certificate No. (CSA)	200039-1121690
Rated voltage (Use group B / CSA)	600 V	Rated voltage (Use group C / CSA)	600 V
Rated voltage (Use group D / CSA)	600 V	Rated current (Use group B / CSA)	33 A
Rated current (Use group C / CSA)	33 A	Rated current (Use group D / CSA)	5 A
Wire cross-section, AWG, min.	AWG 24	Wire cross-section, AWG, max.	AWG 8
Reference to approval values	Specifications are maximum values, details - see approval certificate.		

Rated data acc. to UL 1059

Institute (cURus)		Certificate No. (cURus)	E60693
Rated voltage (Use group B / UL 1059)	600 V	Rated voltage (Use group C / UL 1059)	600 V
Rated voltage (Use group D / UL 1059)	600 V	Rated current (Use group B / UL 1059)	35 A
Rated current (Use group C / UL 1059)	35 A	Rated current (Use group D / UL 1059)	5 A
Wire cross-section, AWG, min.	AWG 24	Wire cross-section, AWG, max.	AWG 8
Reference to approval values	Specifications are maximum values, details - see approval certificate.		

Packing

Packaging	Box	VPE length	40 mm
VPE width	95 mm	VPE height	170 mm

OMNIMATE Power - series BV/SV 7.62HP
BVF 7.62HP/02/180 BCF/06R SN BK BX

Weidmüller Interface GmbH & Co. KG
Klingenbergstraße 26
D-32758 Detmold
Germany
Fon: +49 5231 14-0
Fax: +49 5231 14-292083
www.weidmueller.com

Technical data

Technical data - hybrid

stripping length (Signal)	8 mm	Pitch in mm (Signal)	3.81 mm
Pitch in inches (Signal)	0.15 inch	Number of poles (Signal)	6
L2 in mm	7.62 mm	L2 in inch	0.3 inch
Number of rows (Signal)	2	Contact material (Signal)	CuMg
Contact surface (Signal)	tinned	Rated voltage for overvoltage class/ pollution severity level II/2 (Signal)	400 V
Rated voltage for overvoltage class/ pollution severity level III/2 (Signal)	320 V	Rated voltage for overvoltage class/ pollution severity level III/3 (Signal)	200 V
Rated impulse voltage for overvoltage class/pollution severity level II/2 (Signal)	4 kV	Rated impulse voltage for overvoltage class/pollution severity level III/2 (Signal)	4 kV
Rated impulse voltage for overvoltage class/pollution severity level III/3 (Signal)	4 kV	Short-time withstand current resistance (Signal)	3 x 1s with 80 A
Rated voltage (Use group B / CSA) (Signal)	300 V	Rated voltage (Use group C / CSA) (Signal)	50 V
Rated voltage (Use group D / CSA) (Signal)	300 V	Rated current (Use group B / CSA) (Signal)	9 A
Rated current (Use group C / CSA) (Signal)	9 A	Rated current (Use group D / CSA) (Signal)	9 A
Wire connection cross-section AWG (Signal)	AWG 26...AWG 16	Rated voltage (Use group B / UL 1059] (Signal)	300 V
Rated voltage (Use group C / UL 1059] (Signal)	50 V	Rated voltage (Use group D / UL 1059] (Signal)	300 V
Rated current (Use group B / UL 1059) (Signal)	5 A	Rated current (Use group C / UL 1059) (Signal)	5 A
Rated current (Use group D / UL 1059) (Signal)	5 A	Connector cross-section (Signal)	AWG 26...AWG 16

Conductors that can be connected - Hybrid

Clamping range, rated connection (Power)	0.5...10 mm²	Clamping range, rated connection (Signal)	0.2...1.5 mm²
Connector cross-section (Power)	AWG 24...AWG 8	Connector cross-section AWG (Signal)	AWG 26...AWG 16
solid, H05(07) V-U (Power)	0.5...10 mm²	solid, H05(07) V-U (Signal)	0.14...1.5 mm²
flexible, H05(07) V-K (Power)	0.5...6 mm²	flexible, H05(07) V-K (Signal)	0.14...1.5 mm²
with wire-end ferrule with collar (Power)	0.5...6 mm²	with wire-end ferrule with collar, DIN 46 228/4 (Signal)	0.25...1.5 mm²
with wire-end ferrule according to DIN 46 228/1 (Power)	0.5...6 mm²	with wire-end ferrule according to DIN 46 228/1 (Signal)	0.25...1.5 mm²

Classifications

ETIM 6.0	EC002638	ETIM 7.0	EC002638
eClass 9.0	27-44-03-09	eClass 9.1	27-44-03-09
eClass 10.0	27-44-03-09		

OMNIMATE Power - series BV/SV 7.62HP
BVF 7.62HP/02/180 BCF/06R SN BK BX

Weidmüller Interface GmbH & Co. KG
Klingenbergstraße 26
D-32758 Detmold
Germany
Fon: +49 5231 14-0
Fax: +49 5231 14-292083
www.weidmueller.com

Technical data

Notes

Notes	• Technical specifications refer to the power contacts • Technical data of signal contacts: 50V / 5A, stripping length 8mm • Additional colours on request • Rated current related to rated cross-section & min. No. of poles. • Wire end ferrule with plastic collar to DIN 46228/4 • Wire end ferrule without plastic collar to DIN 46228/1 • Rated data refer only to the component itself. Clearance and creepage distances to other components are to be designed in accordance with the relevant application standards.
IPC conformity	Conformity: The products are developed, manufactured and delivered according international recognized standards and norms and comply with the assured properties in the data sheet resp. fulfill decorative properties in accordance with IPC-A-610 "Class 2". Further claims on the products can be evaluated on request.

Approvals

Approvals	
ROHS	Conform

Downloads

Approval/Certificate/Document of Conformity	Declaration of the Manufacturer
Brochure/Catalogue	FL DRIVES EN MB DEVICE MANUF. EN FL DRIVES DE CAT 2 PORTFOLIOGUIDE EN FL HEATING ELECTR EN FL APPL_INVERTER EN FL_BASE_STATION_EN FL ELEVATOR EN FL POWER SUPPLY EN FL 72H SAMPLE SER EN PO OMNIMATE EN
Engineering Data	EPLAN, WSCAD
Engineering Data	STEP
White paper power electronics connected correctly	Download Whitepaper
User Documentation	Operating Instruction BVF Operating Instruction BVF hybrid QR-Code product handling video
White paper UL 600 V	Download Whitepaper
White paper PUSH IN wire connection	Download Whitepaper

OMNIMATE Power - series BV/SV 7.62HP
BVF 7.62HP/02/180 BCF/06R SN BK BX

Weidmüller Interface GmbH & Co. KG
Klingenbergstraße 26
D-32758 Detmold
Germany
Fon: +49 5231 14-0
Fax: +49 5231 14-292083
www.weidmueller.com

Drawings

Dimensional drawing

Graph

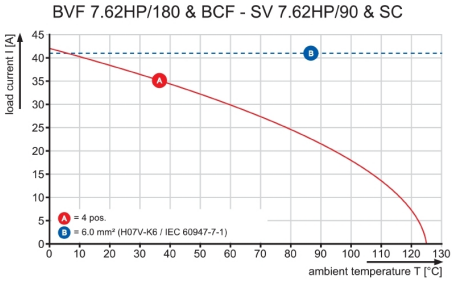

OMNIMATE Power - series BV/SV 7.62HP
BVF 7.62HP/02/180 BCF/06R SN BK BX

Weidmüller Interface GmbH & Co. KG
Klingenbergstraße 26
D-32758 Detmold
Germany
Fon: +49 5231 14-0
Fax: +49 5231 14-292083
www.weidmueller.com

Mating connector (fully pluggable)

SV 7.62HP / SC 3.81 270

Combined 270° male header with power and signal contacts incl. self-locking middle flange interlock with a 7.62 pitch.
Enables simultaneous connection of power, signals and (optional) EMC shielding. Ideal for connecting servo and asynchronous drives.
Meets the requirements of IEC 61800-5-1 and enables UL approval as per UL840 600 V when combined with female header BVF 7.62HP/...BCF..R...
Without a female header, the mating profile guarantees minimum power-contact touch-safety of >3 mm with 20 N pressure on the test finger.
The self-locking middle flange reduces the space requirements by one pitch width in comparison with conventional solutions.
Optionally on request: without flange fastening, with additional screw mount or with soldered flange fastening.

General ordering data

Type	SV 7.62HP/02/270G SC/06 ...	Version	Product data	Packaging
Order No.	1090850000	PCB plug-in connector, male header, closed side, THT solder	IEC: 1000 V / 41 A	Box
GTIN (EAN)	4032248859863	connection, 7.62 mm, Number of poles: 2, 270°, Solder pin length (l):	UL: 300 V / 35 A	
Qty.	66 pc(s).	3.5 mm, tinned, black, Box		

SV 7.62HP / SC 3.81 90

Combined 90° male header with power and signal contacts in PUSH IN connection technology incl. self-locking middle flange interlock and (optional) pluggable shield connection with a 7.62 pitch.
Enables simultaneous connection of power, signals and (optional) EMC shielding. Ideal for connecting servo and asynchronous drives.
Meets the requirements of IEC 61800-5-1 and enables UL approval as per UL840 600 V when combined with female header BVF 7.62HP/...BCF..R...
Without a female header, the mating profile guarantees minimum power-contact touch-safety of >3 mm with 20 N pressure on the test finger.
The self-locking middle flange reduces the space requirements by one pitch width in comparison with conventional solutions.
Optionally on request: without flange fastening, with additional screw mount or with soldered flange fastening.

General ordering data

Type	SV 7.62HP/02/90G SC/06R ...	Version	Product data	Packaging
Order No.	1089920000	PCB plug-in connector, male header, closed side, THT solder	IEC: 1000 V / 41 A	Box
GTIN (EAN)	4032248858347	connection, 7.62 mm, Number of poles: 2, 90°, Solder pin length (l):	UL: 300 V / 35 A	
Qty.	66 pc(s).	3.5 mm, tinned, black, Box		

OMNIMATE Power - series BV/SV 7.62HP
BVF 7.62HP/02/180 BCF/06R SN BK BX

Weidmüller Interface GmbH & Co. KG
Klingenbergstraße 26
D-32758 Detmold
Germany
Fon: +49 5231 14-0
Fax: +49 5231 14-292083
www.weidmueller.com

Accessories

Slotted screwdriver

Slotted screwdriver with rounded blade SD DIN 5265, ISO 2380/2, output to DIN 5264, ISO 2380/1. ChromTop tip, SoftFinish grip

General ordering data

Type	SDS 0.8X4.5X125	Version
Order No.	9009020000	Screwdriver, Blade width (B): 4.5 mm, Blade length: 125 mm, Blade
GTIN (EAN)	4032248266883	thickness (A): 0.8 mm
Qty.	1 pc(s).	

PZ

Crimping tools for wire end ferrules, with and without plastic collars
- Ratchet guarantees precise crimping
- Release option in the event of incorrect operation

General ordering data

Type	PZ 6/5	Version
Order No.	9011460000	Pressing tool, Crimping tool for wire-end ferrules, 0.25mm², 6mm²,
GTIN (EAN)	4008190165352	Trapezoidal indentation crimp
Qty.	1 pc(s).	

OMNIMATE Power - series BV/SV 7.62HP
BVF 7.62HP/02/180 BCF/06R SN BK BX

Weidmüller Interface GmbH & Co. KG
Klingenbergstraße 26
D-32758 Detmold
Germany
Fon: +49 5231 14-0
Fax: +49 5231 14-292083
www.weidmueller.com

Accessories

Coding elements

Only connects what is supposed to be connected: the right connection at the right place.
Coding elements and locking devices clearly assign connecting elements during the manufacturing process and operation
The coding elements and locking devices are inserted prior to assembly or during the cable assembly phase.
The Weidmüller alternative: configure online using the variant configurator to precode prior to delivery.
Incorrect assembly on the circuit board and incorrect plugging of connecting elements is no longer possible.
The advantage: no troubleshooting during manufacture and no operational errors by the user.

General ordering data

Type	BV/SV 7.62HP KO	Version	Product data	Packaging
Order No.	1937590000	PCB plug-in connector, Accessories, Coding element, black, Number of poles: 1		Box
GTIN (EAN)	4032248608881			
Qty.	50 pc(s).			

Dimensions without tolerances are no check dimensions

The English version is binding

BVF7.62HP/.../180BCF/...R
SHOWN: BVF7.62HP/04/180BCF/04R

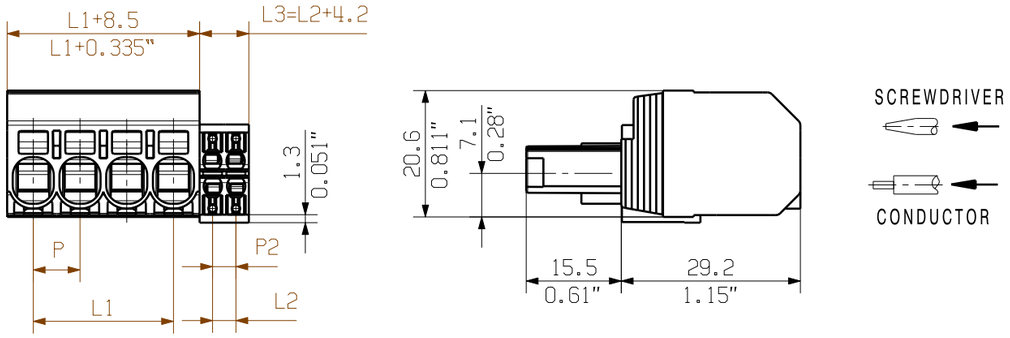

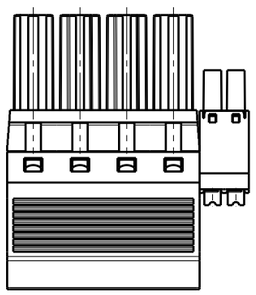

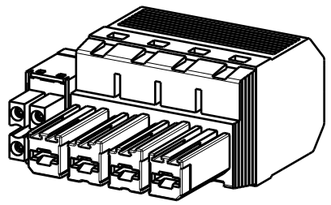

BVF7.62HP/.../180MF...BCF/...R
SHOWN: BVF7.62HP/04/180MF4BCF/04R

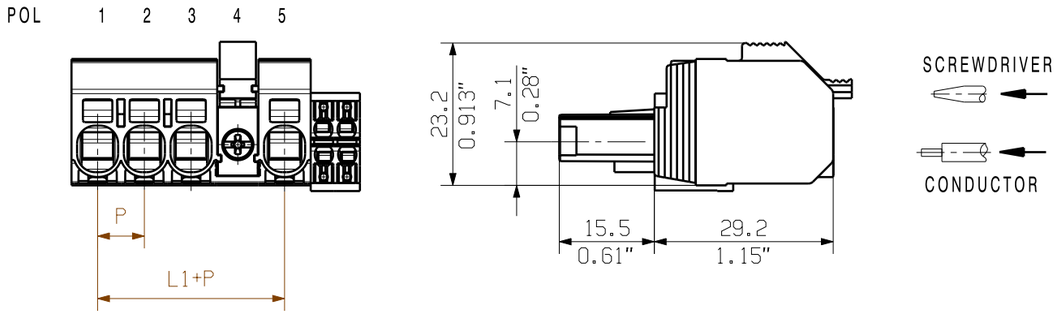

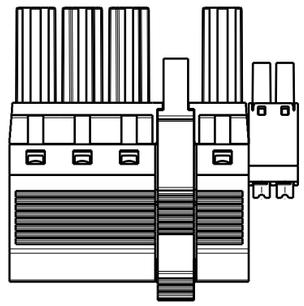

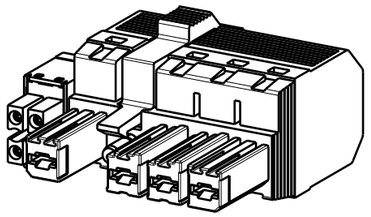

P = Raster/pitch = 7.62
P2 = Raster/pitch = 3.81

POLZAHL/ NO OF POLES	L1 mm	P mm	HYBRID 4POL L3=8.03mm L2=3.81	HYBRID 6POL L3=11.84mm L2=7.62	HYBRID 8POL L3=15.65mm L2=11.43
5	30,48	7.62			
4	22,86				
3	15,24				
2	7,62				

GENERAL TOLERANCE:
DIN ISO 2768-m

P=POL/POLES
MF= MITTELFLANSCH/MIDDLE FLANGE

POLE	1	2	3	4	5	6
5 MF 4	P	P	P	MF	P	P
5 MF 3	P	P	MF	P	P	P
4 MF 4	P	P	P	MF	P	
4 MF 3	P	P	MF	P	P	
3 MF 3	P	P	MF	P		
3 MF 2	P	MF	P	P		
2 MF 2	P	MF	P			
NO OF POLES	POS					

For the mounting of PCBs, it should be noted that the rated data given in the catalogue relates only to the connection elements. The neccessary creepage and clearance paths must be observed in connection with the respective applicant in accordance to VDE 0110. The current-carrying capacity and pitch tolerance is to be determined according to DIN IEC 326 part 3 very fine.

Weidmüller connectors are tested to the DIN VDE 0627 standard, and are valid for its field of application. Provided that the connectors are used to the intended purpose, all requirements with respect to the occuring of electrical, mechanical, thermic and corrosive stress will be satisfied.

RoHS COMPLIANT

Max. nos.

First Issue Date 29.08.2018

00 . Modification

Prim PLM Part No.:005815

Prim ERP Part No.:1080320000

Weidmüller

49284 Drawing no.

10 Issue no.

Sheet 01 of 01 sheets

	Date	Name
Drawn	24.10.2018	Administrator
Responsible		Krug, Matthias
Approved		

Scale: 2/11 Size: A3

Drawings Assembly

BVF 7.62HP/04/180 BCF

BUCHSENLEISTE
SOCKET BLOCK

not released

Product file: 7390 BVF/SVF 7.62HP

The reproduction, distribution and utilization of this document as well as the communication of its contents to others without explicit authorization is prohibited.
Offenders will be held liable for the payment of damages. Weidmueller exclusively reserves the right to file for patents, utility models or designs.
© Weidmueller Interface GmbH & Co. KG