OMNIMATE Power - series BL/SL 7.62HP
SL 7.62HP/10/90G 3.2SN BK BX

Weidmüller Interface GmbH & Co. KG
Klingenbergstraße 26
D-32758 Detmold
Germany
Fon: +49 5231 14-0
Fax: +49 5231 14-292083
www.weidmueller.com

Product image

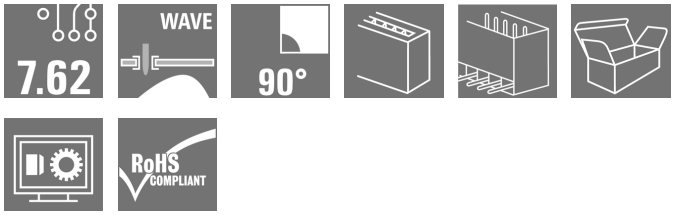

Similar to illustration

Power on board - 100% safety, 100% integration, 100% cost-effectiveness:
The compact, efficient solution for UL-600V applications in the lower performance range up to 12 kVA
- 29 A at 400 V (IEC)
- 20 A at 300 V (UL)
- Single compartment mating profile
- Clamping range: 0.08 - 4 mm² / AWG 28 - 12

Assisting in device approval:
- Meets the requirements for 600 V according to UL 508 / UL840.
- Meets the increased requirements on touch safety as per IEC68100-5-1

The slimming diet for multiple-stage device series:
Reduce the size and cut costs in the high-volume lower performance range without compromising device approval!
Male header, 90° outlet angle

General ordering data

Type	SL 7.62HP/10/90G 3.2SN BK BX
Order No.	1059530000
Version	PCB plug-in connector, male header, closed side, THT solder connection, 7.62 mm, Number of poles: 10, 90°, Solder pin length (l): 3.2 mm, tinned, black, Box
GTIN (EAN)	4032248807352
Qty.	50 pc(s).
Product data	IEC: 630 V / 29 A UL: 300 V / 20 A
Packaging	Box

OMNIMATE Power - series BL/SL 7.62HP
SL 7.62HP/10/90G 3.2SN BK BX

Weidmüller Interface GmbH & Co. KG
Klingenbergstraße 26
D-32758 Detmold
Germany
Fon: +49 5231 14-0
Fax: +49 5231 14-292083
www.weidmueller.com

Technical data

Dimensions and weights

Height	11.6 mm	Height (inches)	0.457 inch
Height of lowest version	8.4 mm	Depth	11.8 mm
Depth (inches)	0.465 inch	Net weight	5.08 g

System specifications

Product family	OMNIMATE Power - series BL/SL 7.62HP	Type of connection	Board connection
Mounting onto the PCB	THT solder connection	Pitch in mm (P)	7.62 mm
Pitch in inches (P)	0.3 inch	Outgoing elbow	90°
Number of poles	10	Number of solder pins per pole	1
Solder pin length (l)	3.2 mm	Tolerance of solder pin position	± 0.15 mm
Solder pin dimensions	1.0 x 1.0 mm	Solder eyelet hole diameter (D)	1.3 mm
Solder eyelet hole diameter tolerance (D)	+ 0,1 mm	L1 in mm	68.58 mm
L1 in inches	2.7 inch	Number of rows	1
Pin series quantity	1	Touch-safe protection acc. to DIN VDE 57 106	Safe from finger touch, plugged
Touch-safe protection acc. to DIN VDE 0470	IP20 plugged	Can be coded	Yes
Plugging cycles	25		

Material data

Insulating material	PBT	Colour	black
Colour chart (similar)	RAL 9011	Insulating material group	IIIa
Comparative Tracking Index (CTI)	≥ 200	Insulation strength	≥ 10^8 Ω
UL 94 flammability rating	V-0	GWFI	960 °C
Contact material	Copper alloy	Contact surface	tinned
Layer structure of solder connection	2-3 µm Ni / 2-4 µm Sn matt	Layer structure of plug contact	2-3 µm Ni / 2-4 µm Sn matt
Storage temperature, min.	-25 °C	Storage temperature, max.	50 °C
Max. relative humidity during storage	70 %	Operating temperature, min.	-50 °C
Operating temperature, max.	100 °C	Temperature range, installation, min.	-25 °C
Temperature range, installation, max.	100 °C		

Rated data acc. to IEC

tested acc. to standard	IEC 60664-1, IEC 61984	Rated current, min. number of poles (Tu=20°C)	29 A
Rated current, max. number of poles (Tu=20°C)	29 A	Rated current, min. number of poles (Tu=40°C)	25 A
Rated current, max. number of poles (Tu=40°C)	21 A	Rated voltage for surge voltage class / pollution degree II/2	630 V
Rated voltage for surge voltage class / pollution degree III/2	500 V	Rated voltage for surge voltage class / pollution degree III/3	400 V
Rated impulse voltage for surge voltage class/ pollution degree II/2	6 kV	Rated impulse voltage for surge voltage class/ pollution degree III/2	6 kV
Rated impulse voltage for surge voltage class/ contamination degree III/3	6 kV	Short-time withstand current resistance	3 x 1s with 180 A
Clearance, min.	6.5 mm	Creepage distance, min.	8.1 mm

OMNIMATE Power - series BL/SL 7.62HP
SL 7.62HP/10/90G 3.2SN BK BX

Weidmüller Interface GmbH & Co. KG
Klingenbergstraße 26
D-32758 Detmold
Germany
Fon: +49 5231 14-0
Fax: +49 5231 14-292083
www.weidmueller.com

Technical data

Rated data acc. to CSA

Institute (CSA)		Certificate No. (CSA)	200039-1121690
Rated voltage (Use group B / CSA)	300 V	Rated voltage (Use group C / CSA)	300 V
Rated voltage (Use group D / CSA)	600 V	Rated current (Use group B / CSA)	20 A
Rated current (Use group C / CSA)	20 A	Rated current (Use group D / CSA)	5 A
Reference to approval values	Specifications are maximum values, details - see approval certificate.		

Rated data acc. to UL 1059

Institute (cURus)		Certificate No. (cURus)	E60693
Rated voltage (Use group B / UL 1059)	300 V	Rated voltage (Use group C / UL 1059)	300 V
Rated voltage (Use group D / UL 1059)	600 V	Rated current (Use group B / UL 1059)	20 A
Rated current (Use group C / UL 1059)	20 A	Rated current (Use group D / UL 1059)	5 A
Clearance distance, min.	6.5 mm	Creepage distance, min.	11.2 mm
Reference to approval values	Specifications are maximum values, details - see approval certificate.		

Packing

Packaging	Box	VPE length	42 mm
VPE width	110 mm	VPE height	225 mm

Classifications

ETIM 6.0	EC002637	ETIM 7.0	EC002637
eClass 9.0	27-44-04-02	eClass 9.1	27-44-04-02
eClass 10.0	27-44-04-02		

Notes

Notes	• Additional colours on request • Gold-plated contact surfaces on request • Rated current related to rated cross-section & min. No. of poles. • P on drawing = pitch • Rated data refer only to the component itself. Clearance and creepage distances to other components are to be designed in accordance with the relevant application standards.
IPC conformity	Conformity: The products are developed, manufactured and delivered according international recognized standards and norms and comply with the assured properties in the data sheet resp. fulfill decorative properties in accordance with IPC-A-610 "Class 2". Further claims on the products can be evaluated on request.

OMNIMATE Power - series BL/SL 7.62HP
SL 7.62HP/10/90G 3.2SN BK BX

Weidmüller Interface GmbH & Co. KG
Klingenbergstraße 26
D-32758 Detmold
Germany
Fon: +49 5231 14-0
Fax: +49 5231 14-292083
www.weidmueller.com

Technical data

Approvals

Approvals	
ROHS	Conform

Downloads

Approval/Certificate/Document of Conformity	Declaration of the Manufacturer
Brochure/Catalogue	FL DRIVES EN MB DEVICE MANUF. EN FL DRIVES DE CAT 2 PORTFOLIOGUIDE EN FL HEATING ELECTR EN FL APPL_INVERTER EN FL_BASE_STATION_EN FL ELEVATOR EN FL POWER SUPPLY EN FL 72H SAMPLE SER EN PO OMNIMATE EN
Engineering Data	EPLAN, WSCAD
Engineering Data	STEP
White paper power electronics connected correctly	Download Whitepaper
Product Change Notification	DE - Change of packaging EN - Change of packaging DE - Change of packaging Step 2 EN - Change of packaging Step 2
White paper UL 600 V	Download Whitepaper

OMNIMATE Power - series BL/SL 7.62HP
SL 7.62HP/10/90G 3.2SN BK BX

Weidmüller Interface GmbH & Co. KG
Klingenbergstraße 26
D-32758 Detmold
Germany
Fon: +49 5231 14-0
Fax: +49 5231 14-292083
www.weidmueller.com

Drawings

Dimensional drawing

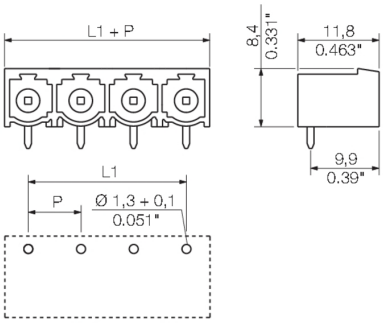

OMNIMATE Power - series BL/SL 7.62HP
SL 7.62HP/10/90G 3.2SN BK BX

Weidmüller Interface GmbH & Co. KG
Klingenbergstraße 26
D-32758 Detmold
Germany
Fon: +49 5231 14-0
Fax: +49 5231 14-292083
www.weidmueller.com

Mating connector (fully pluggable)

BLF 7.62HP/180

180° female header with PUSH-IN connection technology for field wiring in 2.5 mm² with a 7.62 pitch.
Meets the requirements as per UL1059 600 V class C and IEC 61800-5-1
Variants: without flange, external flange, release latch.

General ordering data

Type	BLF 7.62HP/10/180 SN BK ...	Version	Product data	Packaging
Order No.	1227380000	PCB plug-in connector, female plug, 7.62 mm, Number of poles: 10,	IEC: 1000 V / 24 A / 0.5 - 2.5 mm²	Box
GTIN (EAN)	4050118011630	PUSH IN, Clamping range, max. : 2.5 mm², Box	UL: 600 V / 20 A / AWG 20 - AWG 12	
Qty.	24 pc(s).			

Type	BLF 7.62HP/10/180 SN OR ...	Version	Product data	Packaging
Order No.	1230230000	PCB plug-in connector, female plug, 7.62 mm, Number of poles: 10,	IEC: 1000 V / 24 A / 0.5 - 2.5 mm²	Box
GTIN (EAN)	4050118014013	PUSH IN, Clamping range, max. : 2.5 mm², Box	UL: 600 V / 20 A / AWG 20 - AWG 12	
Qty.	24 pc(s).			

BLZ 7.62HP/180

Power on board - 100% safety, 100% integration, 100% cost-effectiveness:
The compact, efficient solution for UL-600V applications in the lower performance range.
High-performance female header for applications up to 12 kVA:
- 29 A with 400 V (IEC)
- 20 A at 600 V (UL)
- 0.08 - 4 mm² / AWG 28 - 12

Assisting in device approval:
- Meets the requirements of 600 V according to UL 508 / UL 840.
- When plugged, meets the increased requirements on touch safety as per IEC 68100-5-1

The slimming diet for multiple-stage device series:
Reduce the size and cut costs in the high-volume lower performance range without compromising device approval!

General ordering data

Type	BLZ 7.62HP/10/180 SN OR ...	Version	Product data	Packaging
Order No.	1980560000	PCB plug-in connector, female plug, 7.62 mm, Number of poles: 10,	IEC: 630 V / 29 A / 0.2 - 4 mm²	Box
GTIN (EAN)	4032248675616	Clamping yoke connection, Clamping range, max. : 4 mm², Box	UL: 600 V / 20 A / AWG 20 - AWG 12	
Qty.	20 pc(s).			

OMNIMATE Power - series BL/SL 7.62HP
SL 7.62HP/10/90G 3.2SN BK BX

Weidmüller Interface GmbH & Co. KG
Klingenbergstraße 26
D-32758 Detmold
Germany
Fon: +49 5231 14-0
Fax: +49 5231 14-292083
www.weidmueller.com

Mating connector (fully pluggable)

Type	BLZ 7.62HP/10/180 SN BK ...	Version	Product data	Packaging
Order No.	1059630000	PCB plug-in connector, female plug, 7.62 mm, Number of poles: 10,	IEC: 630 V / 29 A / 0.2 - 4 mm²	Box
GTIN (EAN)	4032248807598	Clamping yoke connection, Clamping range, max. : 4 mm², Box	UL: 600 V / 20 A / AWG 20 - AWG 12	
Qty.	50 pc(s).			

OMNIMATE Power - series BL/SL 7.62HP
SL 7.62HP/10/90G 3.2SN BK BX

Weidmüller Interface GmbH & Co. KG
Klingenbergstraße 26
D-32758 Detmold
Germany
Fon: +49 5231 14-0
Fax: +49 5231 14-292083
www.weidmueller.com

Accessories

Coding elements

Only connects what is supposed to be connected: the right connection at the right place.
Coding elements and locking devices clearly assign connecting elements during the manufacturing process and operation
The coding elements and locking devices are inserted prior to assembly or during the cable assembly phase.
The Weidmüller alternative: configure online using the variant configurator to precode prior to delivery.
Incorrect assembly on the circuit board and incorrect plugging of connecting elements is no longer possible.
The advantage: no troubleshooting during manufacture and no operational errors by the user.

General ordering data

Type	BLZ/SL KO OR BX	Version	Product data	Packaging
Order No.	1573010000	PCB plug-in connector, Accessories, Coding element, orange, Number		Box
GTIN (EAN)	4008190048396	of poles: 1		
Qty.	100 pc(s).			

Type	BLZ/SL KO BK BX	Version	Product data	Packaging
Order No.	1545710000	PCB plug-in connector, Accessories, Coding element, black, Number		Box
GTIN (EAN)	4008190087142	of poles: 1		
Qty.	50 pc(s).			

Recommended wave solderding profiles

Weidmüller Interface GmbH & Co. KG
Klingenbergstraße 16
D-32758 Detmold
Germany
Fon: +49 5231 14-0
Fax: +49 5231 14-292083
www.weidmueller.com

Single Wave:

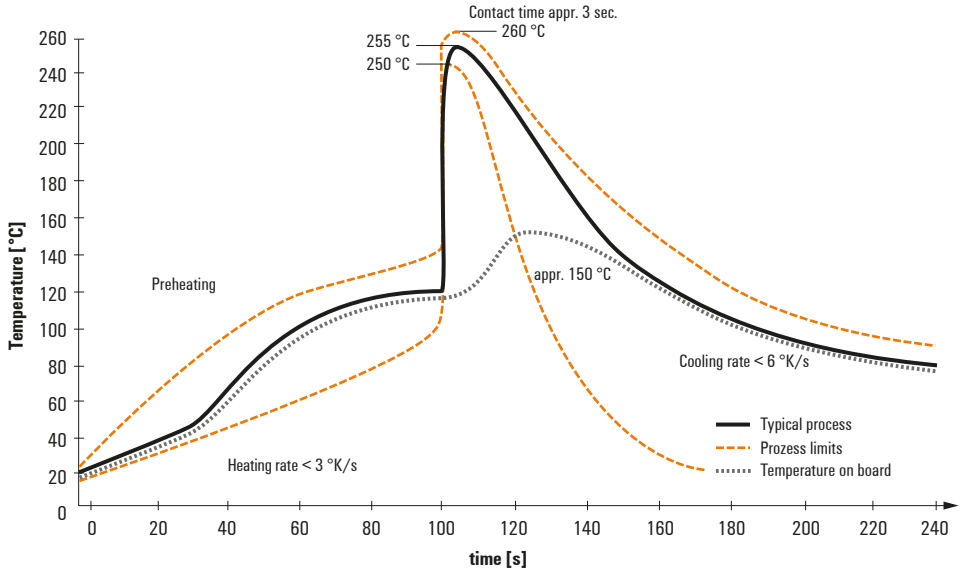

Double Wave:

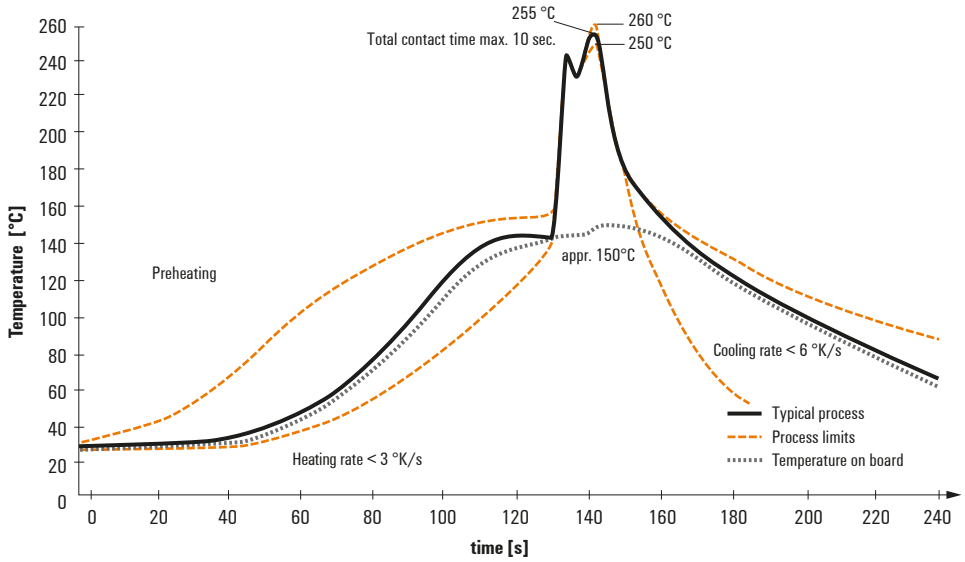

Wave soldering profiles

Wired connection elements should be processed in accordance with the DIN EN 61760-1 standard. We have included two recommendations for practical wave soldering profiles, with which Weidmüller PCB terminals and connectors are qualified.

When choosing a suitable profile for your application, the following factors also need to be considered:
- PCB thickness
- Proportion of Cu in the layers
- Single/double-sided assembly
- Product range
- Heating and cooling rates

The single and double wave profiles each indicate the recommended operating range, including the maximum soldering temperature of 260°C. In practice, the maximum soldering temperature is quite often well below the above maximum profile.

We reserve the right to make technical changes.