OMNIMATE Power - series BL/SL 7.62HP
BLF 7.62HP/03/180F SN OR BX

Weidmüller Interface GmbH & Co. KG
Klingenbergstraße 26
D-32758 Detmold
Germany
Fon: +49 5231 14-0
Fax: +49 5231 14-292083
www.weidmueller.com

Product image

Similar to illustration

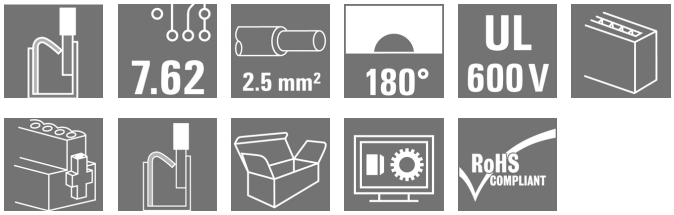

180° female header with PUSH-IN connection technology for field wiring in 2.5 mm² with a 7.62 pitch.
Meets the requirements as per UL1059 600 V class C and IEC 61800-5-1
Variants: without flange, external flange, release latch.

General ordering data

Type	BLF 7.62HP/03/180F SN OR BX
Order No.	1043880000
Version	PCB plug-in connector, female plug, 7.62 mm, Number of poles: 3, PUSH IN, Clamping range, max. : 2.5 mm², Box
GTIN (EAN)	4032248775422
Qty.	54 pc(s).
Product data	IEC: 1000 V / 24 A / 0.5 - 2.5 mm² UL: 600 V / 20 A / AWG 20 - AWG 12
Packaging	Box

Creation date May 1, 2020 10:43:57 AM CEST

OMNIMATE Power - series BL/SL 7.62HP
BLF 7.62HP/03/180F SN OR BX

Weidmüller Interface GmbH & Co. KG
Klingenbergstraße 26
D-32758 Detmold
Germany
Fon: +49 5231 14-0
Fax: +49 5231 14-292083
www.weidmueller.com

Technical data

Dimensions and weights

Height	15.1 mm	Height (inches)	0.594 inch
Depth	28.1 mm	Depth (inches)	1.106 inch
Net weight	9.48 g		

System Parameters

Product family	OMNIMATE Power - series BL/SL 7.62HP	Type of connection	Field connection
Wire connection method	PUSH IN	Pitch in mm (P)	7.62 mm
Pitch in inches (P)	0.3 inch	Number of poles	3
L1 in mm	15.24 mm	L1 in inches	0.6 inch
Number of rows	1	Pin series quantity	1
Rated cross-section	2.5 mm²	Touch-safe protection acc. to DIN VDE 57 106	Safe from finger touch
Touch-safe protection acc. to DIN VDE 0470	IP 20	Can be coded	Yes
Stripping length	10 mm	Tightening torque for screw flange, min.	0.15 Nm
Tightening torque for screw flange, max.	0.25 Nm	Screwdriver blade	0.6 x 3.5
Plugging cycles	25	Plugging force/pole, max.	8.5 N
Pulling force/pole, max.	6 N		

Material data

Insulating material	PBT	Colour	orange
Colour of operational elements	black	Material of operational elements	PBT
Colour chart (similar)	RAL 2000	Insulating material group	IIIa
Comparative Tracking Index (CTI)	≥ 200	Insulation strength	≥ 10^8 Ω
UL 94 flammability rating	V-0	GWFI	960 °C
Contact material	Copper alloy	Contact surface	tinned
Layer structure of plug contact	4-8 µm Sn hot-dip tinned	Storage temperature, min.	-25 °C
Storage temperature, max.	50 °C	Max. relative humidity during storage	70 %
Operating temperature, min.	-50 °C	Operating temperature, max.	100 °C
Temperature range, installation, min.	-25 °C	Temperature range, installation, max.	100 °C

Conductors suitable for connection

Clamping range, min.	0.08 mm²
Clamping range, max.	2.5 mm²
Wire connection cross section AWG, min.	AWG 20
Wire connection cross section AWG, max.	AWG 12
Solid, min. H05(07) V-U	0.5 mm²
Solid, max. H05(07) V-U	1.5 mm²
Flexible, min. H05(07) V-K	0.5 mm²
Flexible, max. H05(07) V-K	2.5 mm²
w. plastic collar ferrule, DIN 46228 pt 4, min.	0.5 mm²
w. plastic collar ferrule, DIN 46228 pt 4, max.	2.5 mm²
w. wire end ferrule, DIN 46228 pt 1, min.	0.5 mm²
w. wire end ferrule, DIN 46228 pt 1, max.	2.5 mm²
Plug gauge in accordance with EN 60999 a x b; ø	2.8 mm x 2.0 mm

Weidmüller

OMNIMATE Power - series BL/SL 7.62HP
BLF 7.62HP/03/180F SN OR BX

Weidmüller Interface GmbH & Co. KG
Klingenbergstraße 26
D-32758 Detmold
Germany
Fon: +49 5231 14-0
Fax: +49 5231 14-292083
www.weidmueller.com

Technical data

Clampable conductor	Cross-section for conductor connection	Type	fine-wired	
		nominal	0.5 mm²	
	wire end ferrule	Stripping length	nominal	12 mm
		Recommended wire-end ferrule	H0,5/16 OR	
		Stripping length	nominal	10 mm
		Recommended wire-end ferrule	H0,5/10	
	Cross-section for conductor connection	Type	fine-wired	
		nominal	0.75 mm²	
	wire end ferrule	Stripping length	nominal	12 mm
		Recommended wire-end ferrule	H0,75/16 W	
		Stripping length	nominal	10 mm
		Recommended wire-end ferrule	H0,75/10	
	Cross-section for conductor connection	Type	fine-wired	
		nominal	1 mm²	
	wire end ferrule	Stripping length	nominal	12 mm
		Recommended wire-end ferrule	H1,0/16D R	
		Stripping length	nominal	10 mm
		Recommended wire-end ferrule	H1,0/10	
	Cross-section for conductor connection	Type	fine-wired	
		nominal	1.5 mm²	
	wire end ferrule	Stripping length	nominal	10 mm
		Recommended wire-end ferrule	H1,5/10	
		Stripping length	nominal	12 mm
		Recommended wire-end ferrule	H1,5/16 R	
	Cross-section for conductor connection	Type	fine-wired	
		nominal	2.5 mm²	
	wire end ferrule	Stripping length	nominal	10 mm
		Recommended wire-end ferrule	H2,5/10	
Reference text	The outside diameter of the plastic collar should not be larger than the pitch (P), Length of ferrules is to be chosen depending on the product and the rated voltage.			
Max. clamping range	2.5 mm²			

Rated data acc. to IEC

tested acc. to standard	IEC 60664-1, IEC 61984	Rated current, min. number of poles (Tu=20°C)	24 A
Rated current, max. number of poles (Tu=20°C)	24 A	Rated current, min. number of poles (Tu=40°C)	23.8 A
Rated current, max. number of poles (Tu=40°C)	21 A	Rated voltage for surge voltage class / pollution degree II/2	1,000 V
Rated voltage for surge voltage class / pollution degree III/2	1,000 V	Rated voltage for surge voltage class / pollution degree III/3	630 V
Rated impulse voltage for surge voltage class/ pollution degree II/2	6 kV	Rated impulse voltage for surge voltage class/ pollution degree III/2	8 kV
Rated impulse voltage for surge voltage class/ contamination degree III/3	6 kV	Short-time withstand current resistance	3 x 1s with 180 A
Clearance, min.	11.4 mm	Creepage distance, min.	11.4 mm

OMNIMATE Power - series BL/SL 7.62HP
BLF 7.62HP/03/180F SN OR BX

Weidmüller Interface GmbH & Co. KG
Klingenbergstraße 26
D-32758 Detmold
Germany
Fon: +49 5231 14-0
Fax: +49 5231 14-292083
www.weidmueller.com

Technical data

Rated data acc. to CSA

Institute (CSA)		Certificate No. (CSA)	
			200039-1121690
Rated voltage (Use group B / CSA)	600 V	Rated voltage (Use group C / CSA)	600 V
Rated voltage (Use group D / CSA)	600 V	Rated current (Use group B / CSA)	21 A
Rated current (Use group C / CSA)	21 A	Rated current (Use group D / CSA)	5 A
Wire cross-section, AWG, min.	AWG 20	Wire cross-section, AWG, max.	AWG 12
Reference to approval values	Specifications are maximum values, details - see approval certificate.		

Rated data acc. to UL 1059

Institute (cURus)		Certificate No. (cURus)	
			E60693
Rated voltage (Use group B / UL 1059)	600 V	Rated voltage (Use group C / UL 1059)	600 V
Rated voltage (Use group D / UL 1059)	600 V	Rated current (Use group B / UL 1059)	20 A
Rated current (Use group C / UL 1059)	20 A	Rated current (Use group D / UL 1059)	5 A
Wire cross-section, AWG, min.	AWG 20	Wire cross-section, AWG, max.	AWG 12
Reference to approval values	Specifications are maximum values, details - see approval certificate.		

Packing

Packaging	Box	VPE length	30 mm
VPE width	135 mm	VPE height	350 mm

Classifications

ETIM 6.0	EC002638	ETIM 7.0	EC002638
eClass 9.0	27-44-03-09	eClass 9.1	27-44-03-09
eClass 10.0	27-44-03-09	UNSPSC	30-21-18-01

OMNIMATE Power - series BL/SL 7.62HP
BLF 7.62HP/03/180F SN OR BX

Weidmüller Interface GmbH & Co. KG
Klingenbergstraße 26
D-32758 Detmold
Germany
Fon: +49 5231 14-0
Fax: +49 5231 14-292083
www.weidmueller.com

Technical data

Notes

Notes	• Additional colours on request • Gold-plated contact surfaces on request • Rated current related to rated cross-section & min. No. of poles. • Wire end ferrule without plastic collar to DIN 46228/1 • Wire end ferrule with plastic collar to DIN 46228/4 • P on drawing = pitch • Rated data refer only to the component itself. Clearance and creepage distances to other components are to be designed in accordance with the relevant application standards. • Crimping shape "A" for wire end ferrules with PZ 6/5 crimping tool recommended.
IPC conformity	Conformity: The products are developed, manufactured and delivered according international recognized standards and norms and comply with the assured properties in the data sheet resp. fulfill decorative properties in accordance with IPC-A-610 "Class 2". Further claims on the products can be evaluated on request.

Approvals

Approvals	
ROHS	Conform

Downloads

Approval/Certificate/Document of Conformity	Declaration of the Manufacturer
Brochure/Catalogue	FL DRIVES EN MB DEVICE MANUF. EN FL DRIVES DE FL HEATING ELECTR EN FL APPL_INVERTER EN FL_BASE_STATION_EN FL ELEVATOR EN FL POWER SUPPLY EN FL 72H SAMPLE SER EN PO OMNIMATE EN
Engineering Data	EPLAN, WSCAD
Engineering Data	STEP
White paper power electronics connected correctly	Download Whitepaper
User Documentation	Operating Instruction BLF QR-Code product handling video
White paper UL 600 V	Download Whitepaper
White paper PUSH IN wire connection	Download Whitepaper

OMNIMATE Power - series BL/SL 7.62HP
BLF 7.62HP/03/180F SN OR BX

Weidmüller Interface GmbH & Co. KG
Klingenbergstraße 26
D-32758 Detmold
Germany
Fon: +49 5231 14-0
Fax: +49 5231 14-292083
www.weidmueller.com

Drawings

Dimensional drawing

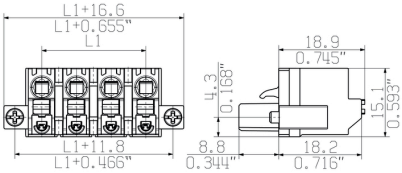

Graph

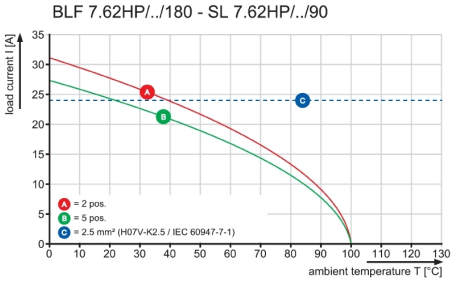

Graph

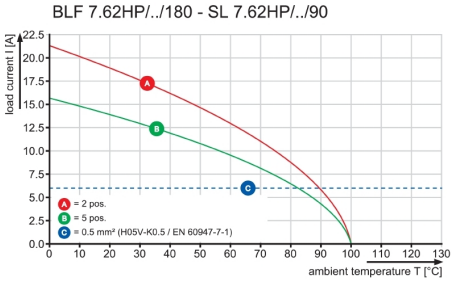

Product benefits

Vibration-proof connection

OMNIMATE Power - series BL/SL 7.62HP
BLF 7.62HP/03/180F SN OR BX

Weidmüller Interface GmbH & Co. KG
Klingenbergstraße 26
D-32758 Detmold
Germany
Fon: +49 5231 14-0
Fax: +49 5231 14-292083
www.weidmueller.com

Mating connector (fully pluggable)

SL 7.62HP/90F

Power on board - 100% safety, 100% integration, 100% cost-effectiveness:
The compact, efficient solution for UL-600V applications in the lower performance range up to 12 kVA
- 29 A at 400 V (IEC)
- 20 A at 300 V (UL)
- Single compartment mating profile
- Clamping range: 0.08 - 4 mm² / AWG 28 - 12

Assisting in device approval:
- Meets the requirements for 600 V according to UL 508 / UL840.
- Meets the increased requirements on touch safety as per IEC68100-5-1

The slimming diet for multiple-stage device series:
Reduce the size and cut costs in the high-volume lower performance range without compromising device approval!
Male header, 90° outlet angle with screw flanges

General ordering data

Type	SL 7.62HP/03/90F 3.2 SN ...	Version	Product data	Packaging
Order No.	1026820000	PCB plug-in connector, male header, Flange, THT solder connection,	IEC: 630 V / 29 A	Box
GTIN (EAN)	4032248752317	7.62 mm, Number of poles: 3, 90°, Solder pin length (l): 3.2 mm,	UL: 300 V / 20 A	
Qty.	54 pc(s).	tinned, orange, Box		

Type	SL 7.62HP/03/90F 3.2 SN ...	Version	Product data	Packaging
Order No.	1026860000	PCB plug-in connector, male header, Flange, THT solder connection,	IEC: 630 V / 29 A	Box
GTIN (EAN)	4032248752355	7.62 mm, Number of poles: 3, 90°, Solder pin length (l): 3.2 mm,	UL: 300 V / 20 A	
Qty.	54 pc(s).	tinned, black, Box		

OMNIMATE Power - series BL/SL 7.62HP
BLF 7.62HP/03/180F SN OR BX

Weidmüller Interface GmbH & Co. KG
Klingenbergstraße 26
D-32758 Detmold
Germany
Fon: +49 5231 14-0
Fax: +49 5231 14-292083
www.weidmueller.com

Mating connector (fully pluggable)

SL 7.62HP/180LF

Power on board - 100% safety, 100% integration, 100% cost-effectiveness:
The compact, efficient solution for UL-600V applications in the lower performance range.
High-performance male header for applications up to 12 kVA:
- 29 A at 400 V (IEC)
- 20 A at 600 V (UL)
- Single compartment mating profile

Assisting in device approval:
- Meets the requirements for 600 V according to UL 508 / UL840.
- Meets the increased requirements on touch safety as per IEC68100-5-1 when combined with female header BLZ 7.62 HP

The slimming diet for multiple-stage device series:
Reduce the size and cut costs in the high-volume lower performance range without compromising device approval!
Male header, 180° outlet direction, with solder flanges

General ordering data

Type	SL 7.62HP/03/180LF 3.2 ...	Version	Product data	Packaging
Order No.	1141210000	PCB plug-in connector, male header, Solder flange, THT solder connection, 7.62 mm, Number of poles: 3, 180°, Solder pin length (l): 3.2 mm, tinned, orange, Box	IEC: 630 V / 29 A UL: 300 V / 20 A	Box
GTIN (EAN)	4032248924059			
Qty.	100 pc(s).			
Type	SL 7.62HP/03/180LF 3.2 ...	Version	Product data	Packaging
Order No.	1141100000	PCB plug-in connector, male header, Solder flange, THT solder connection, 7.62 mm, Number of poles: 3, 180°, Solder pin length (l): 3.2 mm, tinned, black, Box	IEC: 630 V / 29 A UL: 300 V / 20 A	Box
GTIN (EAN)	4032248923748			
Qty.	100 pc(s).			

OMNIMATE Power - series BL/SL 7.62HP
BLF 7.62HP/03/180F SN OR BX

Weidmüller Interface GmbH & Co. KG
Klingenbergstraße 26
D-32758 Detmold
Germany
Fon: +49 5231 14-0
Fax: +49 5231 14-292083
www.weidmueller.com

Mating connector (fully pluggable)

SL 7.62HP/180F

Power on board - 100% safety, 100% integration, 100% cost-effectiveness:
The compact, efficient solution for UL-600V applications in the lower performance range.
High-performance male header for applications up to 12 kVA:
- 29 A at 400 V (IEC)
- 20 A at 600 V (UL)
- Single compartment mating profile

Assisting in device approval:
- Meets the requirements for 600 V according to UL 508 / UL840.
- Meets the increased requirements on touch safety as per IEC68100-5-1 when combined with female header BLZ 7.62 HP

The slimming diet for multiple-stage device series:
Reduce the size and cut costs in the high-volume lower performance range without compromising device approval!
Male header, 180° outlet direction, with screw flanges

General ordering data

Type	SL 7.62HP/03/180F 3.2 S ...	Version	Product data	Packaging
Order No.	1140880000	PCB plug-in connector, male header, Flange, THT solder connection, 7.62 mm, Number of poles: 3, 180°, Solder pin length (l): 3.2 mm, tinned, black, Box	IEC: 630 V / 29 A UL: 300 V / 20 A	Box
GTIN (EAN)	4032248922901			
Qty.	100 pc(s).			
Type	SL 7.62HP/03/180F 3.2 S ...	Version	Product data	Packaging
Order No.	1140990000	PCB plug-in connector, male header, Flange, THT solder connection, 7.62 mm, Number of poles: 3, 180°, Solder pin length (l): 3.2 mm, tinned, orange, Box	IEC: 630 V / 29 A UL: 300 V / 20 A	Box
GTIN (EAN)	4032248923465			
Qty.	100 pc(s).			

OMNIMATE Power - series BL/SL 7.62HP
BLF 7.62HP/03/180F SN OR BX

Weidmüller Interface GmbH & Co. KG
Klingenbergstraße 26
D-32758 Detmold
Germany
Fon: +49 5231 14-0
Fax: +49 5231 14-292083
www.weidmueller.com

Mating connector (fully pluggable)

SL 7.62HP/270LF

Power on board - 100% safety, 100% integration, 100% cost-effectiveness:
The compact, efficient solution for UL-600V applications in the lower performance range up to 12 kVA
- 29 A at 400 V (IEC)
- 20 A at 300 V (UL)
- Single compartment mating profile
- Clamping range: 0.08 - 4 mm² / AWG 28 - 12

Assisting in device approval:
- Meets the requirements for 600 V according to UL 508 / UL840.
- Meets the increased requirements on touch safety as per IEC68100-5-1

The slimming diet for multiple-stage device series:
Reduce the size and cut costs in the high-volume lower performance range without compromising device approval!
Male header, 270° outlet angle with solder flanges

General ordering data

Type	SL 7.62HP/03/270LF 3.2S ...	Version	Product data	Packaging
Order No.	1472370000	PCB plug-in connector, male header, Solder flange, THT solder	IEC: 630 V / 27.5 A	Box
GTIN (EAN)	4050118317527	connection, 7.62 mm, Number of poles: 3, 270°, Solder pin length (l):	UL: 300 V / 20 A	
Qty.	100 pc(s).	3.2 mm, black, Box		
Type	SL 7.62HP/03/270LF 3.2S ...	Version	Product data	Packaging
Order No.	1472620000	PCB plug-in connector, male header, Solder flange, THT solder	IEC: 630 V / 27.5 A	Box
GTIN (EAN)	4050118317749	connection, 7.62 mm, Number of poles: 3, 270°, Solder pin length (l):	UL: 300 V / 20 A	
Qty.	100 pc(s).	3.2 mm, orange, Box		

OMNIMATE Power - series BL/SL 7.62HP
BLF 7.62HP/03/180F SN OR BX

Weidmüller Interface GmbH & Co. KG
Klingenbergstraße 26
D-32758 Detmold
Germany
Fon: +49 5231 14-0
Fax: +49 5231 14-292083
www.weidmueller.com

Mating connector (fully pluggable)

SL 7.62HP/90LF

Power on board - 100% safety, 100% integration, 100% cost-effectiveness:
The compact, efficient solution for UL-600V applications in the lower performance range up to 12 kVA
- 29 A at 400 V (IEC)
- 20 A at 300 V (UL)
- Single compartment mating profile
- Clamping range: 0.08 - 4 mm² / AWG 28 - 12

Assisting in device approval:
- Meets the requirements for 600 V according to UL 508 / UL840.
- Meets the increased requirements on touch safety as per IEC68100-5-1

The slimming diet for multiple-stage device series:
Reduce the size and cut costs in the high-volume lower performance range without compromising device approval!
Male header, 90° outlet angle with solder flanges

General ordering data

Type	SL 7.62HP/03/90LF 3.2 S ...	Version	Product data	Packaging
Order No.	1095930000	PCB plug-in connector, male header, Solder flange, THT solder connection, 7.62 mm, Number of poles: 3, 90°, Solder pin length (l): 3.2 mm, tinned, black, Box	IEC: 630 V / 29 A UL: 300 V / 20 A	Box
GTIN (EAN)	4032248957484			
Qty.	100 pc(s).			

Type	SL 7.62HP/03/90LF 3.2 S ...	Version	Product data	Packaging
Order No.	1096040000	PCB plug-in connector, male header, Solder flange, THT solder connection, 7.62 mm, Number of poles: 3, 90°, Solder pin length (l): 3.2 mm, tinned, orange, Box	IEC: 630 V / 29 A UL: 300 V / 20 A	Box
GTIN (EAN)	4032248960163			
Qty.	100 pc(s).			

OMNIMATE Power - series BL/SL 7.62HP
BLF 7.62HP/03/180F SN OR BX

Weidmüller Interface GmbH & Co. KG
Klingenbergstraße 26
D-32758 Detmold
Germany
Fon: +49 5231 14-0
Fax: +49 5231 14-292083
www.weidmueller.com

Accessories

PZ

Crimping tools for wire end ferrules, with and without plastic collars
- Ratchet guarantees precise crimping
- Release option in the event of incorrect operation

General ordering data

Type	PZ 6/5	Version
Order No.	9011460000	Pressing tool, Crimping tool for wire-end ferrules, 0.25mm², 6mm²,
GTIN (EAN)	4008190165352	Trapezoidal indentation crimp
Qty.	1 pc(s).	

Coding elements

Only connects what is supposed to be connected: the right connection at the right place.
Coding elements and locking devices clearly assign connecting elements during the manufacturing process and operation
The coding elements and locking devices are inserted prior to assembly or during the cable assembly phase.
The Weidmüller alternative: configure online using the variant configurator to precode prior to delivery.
Incorrect assembly on the circuit board and incorrect plugging of connecting elements is no longer possible.
The advantage: no troubleshooting during manufacture and no operational errors by the user.

General ordering data

Type	BLZ/SL KO BK BX	Version	Product data	Packaging
Order No.	1545710000	PCB plug-in connector, Accessories, Coding element, black, Number		Box
GTIN (EAN)	4008190087142	of poles: 1		
Qty.	50 pc(s).			
Type	BLZ/SL KO OR BX	Version	Product data	Packaging
Order No.	1573010000	PCB plug-in connector, Accessories, Coding element, orange, Number		Box
GTIN (EAN)	4008190048396	of poles: 1		
Qty.	100 pc(s).			

OMNIMATE Power - series BL/SL 7.62HP
BLF 7.62HP/03/180F SN OR BX

Weidmüller Interface GmbH & Co. KG
Klingenbergstraße 26
D-32758 Detmold
Germany
Fon: +49 5231 14-0
Fax: +49 5231 14-292083
www.weidmueller.com

Accessories

Slotted screwdriver

Slotted screwdriver with rounded blade SD DIN 5265, ISO 2380/2, output to DIN 5264, ISO 2380/1. ChromTop tip, SoftFinish grip

General ordering data

Type	SDS 0.6X3.5X100	Version
Order No.	9008330000	Screwdriver, Blade width (B): 3.5 mm, Blade length: 100 mm, Blade
GTIN (EAN)	4032248056286	thickness (A): 0.6 mm
Qty.	1 pc(s).	

Slotted screwdriver

VDE insulated slot-head screwdriver, SDI DIN 7437, ISO 2380/2, drive output acc. to DIN 5264, ISO 2380/1. SoftFinish grip

General ordering data

Type	SDIS 0.6X3.5X100	Version
Order No.	9008390000	Screwdriver, Blade width (B): 3.5 mm, Blade length: 100 mm, Blade
GTIN (EAN)	4032248056354	thickness (A): 0.6 mm
Qty.	1 pc(s).	

Dimensions without tolerances are no check dimensions

The English version is binding

SHOWN: BLF7.62HP/04/ 180F

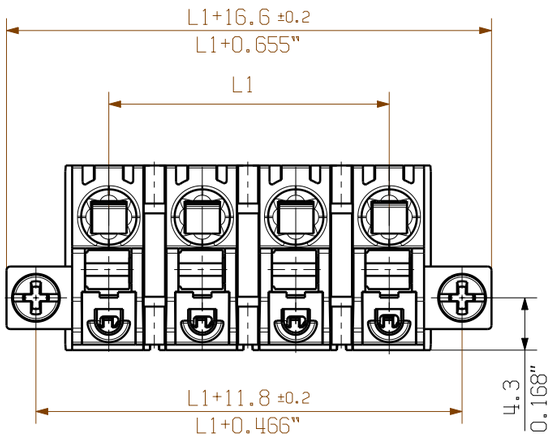

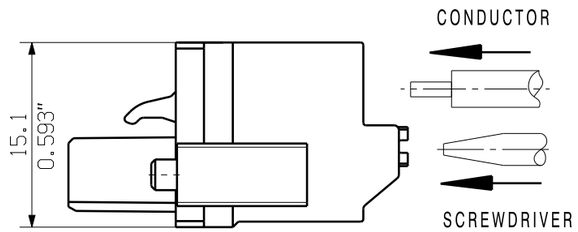

M 1:1

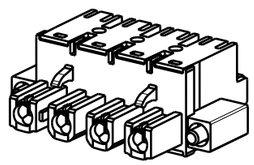

SHOWN: BLF7.62HP/04/ 180LR

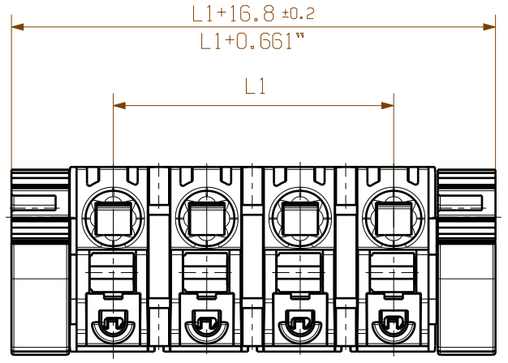

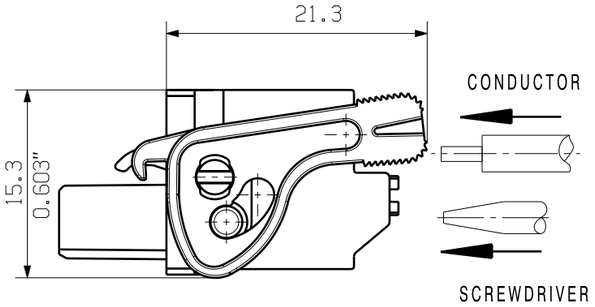

M 1:1

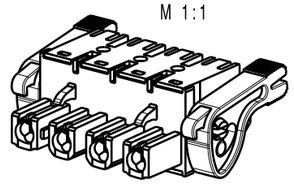

SHOWN: BLF7.62HP/04/ 180

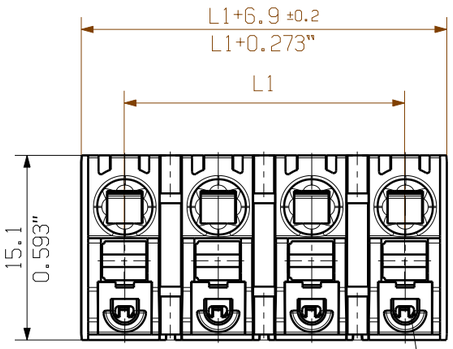

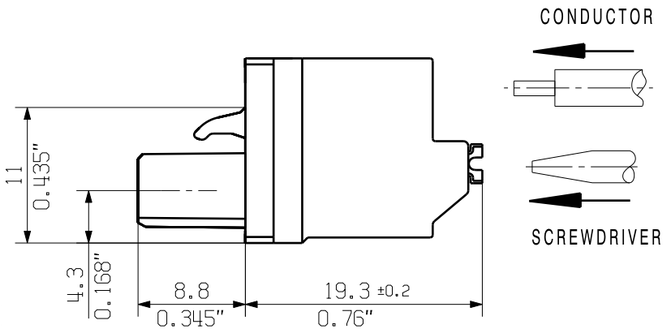

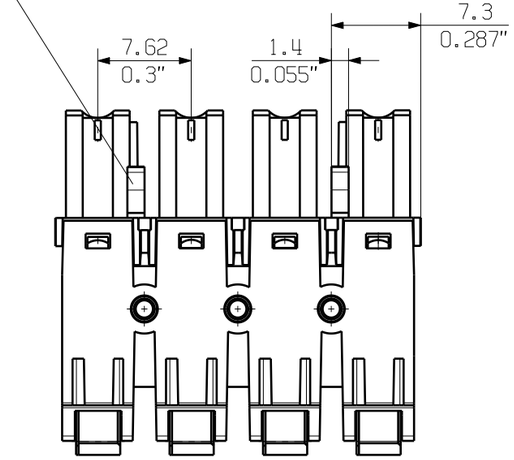

M 1:1

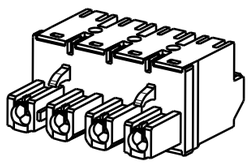

n	L1 [mm]	L1 [Inch]
12	83,82	3,300
11	76,20	3,000
10	68,58	2,700
9	60,96	2,400
8	53,34	2,100
7	45,72	1,800
6	38,10	1,500
5	30,48	1,200
4	22,86	0,900
3	15,24	0,600
2	7,62	0,300

For the mounting of PCBs, it should be noted that the rated data given in the catalogue relates only to the connection elements. The neccessary creepage and clearance paths must be observed in connection with the respective applicant in accordance to VDE 0110. The current-carrying capacity and pitch tolerance is to be determined according to DIN IEC 326 part 3 very fine.

Weidmüller PCB components are tested to the DIN VDE 0627 standard, and are valid for its field of application. Provided that the components are used to the intended purpose, all requirements with respect to the occuring of electrical, mechanical, thermic and corrosive stress will be satisfied.

RoHS COMPLIANT

GENERAL TOLERANCES
DIN ISO 2768-m

97601/5
20.09.17 HELIS_MA 00
.

Modification

Cat.no.: .

Weidmüller

3 46060 07
Drawing no. Issue no.

Sheet 01 of 02 sheets

	Date	Name
Drawn	24.04.2017	HELIS_MA
Responsible		KRUG_M
Checked	20.09.2017	HERTEL_S
Approved		LANG_T

Scale: 2:1

Supersedes: .

BLF 7.62HP/../180

BUCHSENLEISTE
SOCKET BLOCK

Product file: BLF/SLF 7.62 7381

The reproduction, distribution and utilization of this document as well as the communication of its contents to others without explicit authorization is prohibited.
Offenders will be held liable for the payment of damages. Weidmueller exclusively reserves the right to file for patents, utility models or designs.
© Weidmueller Interface GmbH & Co. KG