SAK Series
SAKT 1/DU1

Weidmüller Interface GmbH & Co. KG
Klingenbergstraße 26
D-32758 Detmold
Germany
Fon: +49 5231 14-0
Fax: +49 5231 14-292083
www.weidmueller.com

Product image

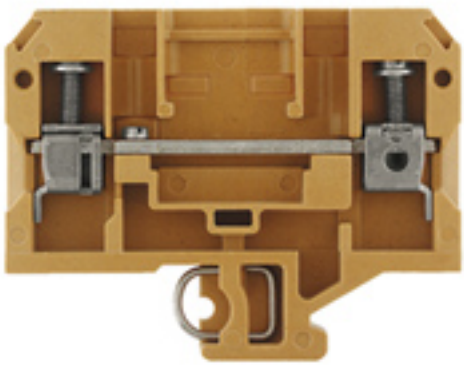

Klippon® Connect with clamping yoke Technology
The high reliability and variety of designs of the terminal blocks with clamping yoke connections make planning easer and optimises operational safety. Klippon® Connect provides a proven response to a range of different requirements.

General ordering data

Type	SAKT 1/DU1
Order No.	0195620000
Version	SAK Series, Feed-through terminal, Rated cross-section: 6 mm², Screw connection, medium yellow, Direct mounting
GTIN (EAN)	4008190100391
Qty.	50 pc(s).

SAK Series
SAKT 1/DU1

Weidmüller Interface GmbH & Co. KG
Klingenbergstraße 26
D-32758 Detmold
Germany
Fon: +49 5231 14-0
Fax: +49 5231 14-292083
www.weidmueller.com

Technical data

Dimensions and weights

Width	8 mm	Width (inches)	0.315 inch
Height	65 mm	Height (inches)	2.559 inch
Depth	52.5 mm	Depth (inches)	2.067 inch
Net weight	23.62 g		

Temperatures

Storage temperature, max.	40 °C	Storage temperature, min.	10 °C
Storage temperature	10 °C...40 °C	Continuous operating temp., min.	-60 °C
Continuous operating temp., max.	130 °C		

Material data

Material	KrG	Colour	medium yellow
UL 94 flammability rating	V-0, 5VA		

System specifications

Version	Screw connection, for screwable cross-connection, One end without connector	End cover plate required	Yes
Number of potentials	1	Number of levels	1
Number of clamping points per level	2	Number of potentials per tier	1
Levels cross-connected internally	No	PE connection	No
Rail	TS 32	N-function	No
PE function	No	PEN function	No

Additional technical data

Explosion-tested version	No	Installation advice	Direct mounting
Number of similar terminals	1	Open sides	right
Type of mounting	Snap-on		

CSA rating data

Certificate No. (CSA)	12400-198	Current size C (CSA)	25 A
Voltage size C (CSA)	300 V	Wire cross section max. (CSA)	8 AWG
Wire cross section min. (CSA)	26 AWG		

SAK Series
SAKT 1/DU1

Weidmüller Interface GmbH & Co. KG
Klingenbergstraße 26
D-32758 Detmold
Germany
Fon: +49 5231 14-0
Fax: +49 5231 14-292083
www.weidmueller.com

Technical data

Conductors for clamping (rated connection)

Blade size	4.0 x 0.8 mm	Clamping range, max.	10 mm²
Clamping range, min.	0.13 mm²	Clamping screw	M 3.5
Connection cross-section, stranded, max.	10 mm²	Connection cross-section, stranded, min.	1.5 mm²
Connection direction	on side	Gauge to IEC 60947-1	A5
Number of connections	2	Stripping length	12 mm
Tightening torque, max.	1.6 Nm	Tightening torque, min.	0.8 Nm
Torque level with DMS electric screwdriver	3	Type of connection	Screw connection
Wire connection cross section AWG, max.	AWG 8	Wire connection cross section AWG, min.	AWG 26
Wire connection cross section, finely stranded, max.	6 mm²	Wire connection cross-section, finely stranded with wire-end ferrules DIN 46228/1, max.	6 mm²
Wire connection cross-section, finely stranded with wire-end ferrules DIN 46228/1, min.	0.5 mm²	Wire connection cross-section, finely stranded, min.	0.5 mm²
Wire connection cross-section, solid core, max.	10 mm²	Wire connection cross-section, solid core, min.	0.5 mm²

Rating data

Rated cross-section	6 mm²	Rated voltage	400 V
Rated current	41 A	Current at maximum wires	57 A
Standards	IEC 60947-7-1	Volume resistance according to IEC 60947-7-x	0.78 mΩ
Power loss in accordance with IEC 60947-7-x	1.31 W	Rated impulse withstand voltage	6 kV
Pollution severity	3		

Classifications

ETIM 6.0	EC000897	ETIM 7.0	EC000897
eClass 9.0	27-14-11-20	eClass 9.1	27-14-11-20
eClass 10.0	27-14-11-20	UNSPSC	30-21-18-11

Approvals

Approvals	
ROHS	Conform

Downloads

Approval/Certificate/Document of Conformity	DE_PT1344_20160418_618_ISSUE01.pdf
Engineering Data	EPLAN, WSCAD
Engineering Data	STEP
User Documentation	StorageConditionsTerminalBlocks

Safety note

Safety notice	Safety Information

SAK Series
SAKT 1/DU1

Weidmüller Interface GmbH & Co. KG
Klingenbergstraße 26
D-32758 Detmold
Germany
Fon: +49 5231 14-0
Fax: +49 5231 14-292083
www.weidmueller.com

Accessories

QL / SAK 6N

Klippon® Connect with clamping yoke Technology
The high reliability and variety of designs of the terminal blocks with clamping yoke connections make planning easer and optimises operational safety. Klippon® Connect provides a proven response to a range of different requirements.

General ordering data

Type	QL 4 SAK6N	Version
Order No.	0194500000	SAK Series, Cross-connector, for cross-connection link, Number of
GTIN (EAN)	4008190025601	poles: 4
Qty.	50 pc(s).	
Type	QL 2 SAK6N	Version
Order No.	0194300000	SAK Series, Cross-connector, for cross-connection link, Number of
GTIN (EAN)	4008190182854	poles: 2
Qty.	50 pc(s).	
Type	QL 10 SAK6N	Version
Order No.	0338300000	SAK Series, Cross-connector, for cross-connection link, Number of
GTIN (EAN)	4008190176679	poles: 10
Qty.	20 pc(s).	
Type	QL 15 SAK6N	Version
Order No.	0221200000	SAK Series, Cross-connector, for cross-connection link, Number of
GTIN (EAN)	4008190042110	poles: 15
Qty.	10 pc(s).	
Type	QL 3 SAK6N	Version
Order No.	0194400000	SAK Series, Cross-connector, for cross-connection link, Number of
GTIN (EAN)	4008190063351	poles: 3
Qty.	50 pc(s).	

SAK Series
SAKT 1/DU1

Weidmüller Interface GmbH & Co. KG
Klingenbergstraße 26
D-32758 Detmold
Germany
Fon: +49 5231 14-0
Fax: +49 5231 14-292083
www.weidmueller.com

Accessories

Blank

The Dekafix (DEK) marker is the universal marker for all conductor and plug-in connectors as well as for electronic sub-assemblies. The system is ideal for short number sequences and covers a wide range of ready-printed markers.
Strips for fast installation in only one work step. The printing is easy to read, rich in contrast and available in various widths.

- Large range of ready-to-use markers
- Strips for fast installation
- Terminal markers, suitable for all Weidmüller cable connectors
- Available as blank MultiCard or with standard printing

For custom printing: Please send us a file of our labeling software M-Print PRO or M-Print PRO Online (without installation) for your labeling specifications.

General ordering data

Type	DEK 5/6.5 MC NE WS	Version
Order No.	1609840000	Dekafix, Terminal marker, 5 x 6.5 mm, Pitch in mm (P): 6.50
GTIN (EAN)	4008190203429	Weidmueller, white
Qty.	900 pc(s).	

End bracket

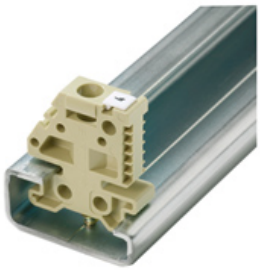

Klippon® Connect with clamping yoke Technology
The high reliability and variety of designs of the terminal blocks with clamping yoke connections make planning easer and optimises operational safety. Klippon® Connect provides a proven response to a range of different requirements.

General ordering data

Type	EWK 1	Version
Order No.	0206160000	Accessories, End bracket
GTIN (EAN)	4008190080020	
Qty.	50 pc(s).	
Type	EW 15	Version
Order No.	0382860000	Accessories, End bracket
GTIN (EAN)	4008190187804	
Qty.	50 pc(s).	
Type	EW 15/2	Version
Order No.	1071900000	Accessories, End bracket
GTIN (EAN)	4008190462949	
Qty.	50 pc(s).	

Weidmüller

SAK Series
SAKT 1/DU1

Weidmüller Interface GmbH & Co. KG
Klingenbergstraße 26
D-32758 Detmold
Germany
Fon: +49 5231 14-0
Fax: +49 5231 14-292083
www.weidmueller.com

Accessories

Type	EW 35/SCHA/M3	Version
Order No.	0258660000	Accessories, End bracket
GTIN (EAN)	4008190033477	
Qty.	20 pc(s).	
Type	EWK 2	Version
Order No.	0199360000	Accessories, End bracket
GTIN (EAN)	4008190023546	
Qty.	50 pc(s).	
Type	EW 35	Version
Order No.	0383560000	Accessories, End bracket
GTIN (EAN)	4008190181314	
Qty.	50 pc(s).	
Type	EW 35 GR 7032	Version
Order No.	0383530000	Accessories, End bracket
GTIN (EAN)	4008190027322	
Qty.	50 pc(s).	
Type	EWK 1 ALT	Version
Order No.	0495160000	Accessories, End bracket
GTIN (EAN)	4008190160777	
Qty.	50 pc(s).	
Type	WEW 32/1	Version
Order No.	1067600000	W-Series, End bracket
GTIN (EAN)	4008190099657	
Qty.	50 pc(s).	

Test plug

Current and voltage transformer wiring
Our test disconnect terminal blocks featuring spring and screw connection technology allow you to create all the important converter circuits for measuring current, voltage and power in a safe and sophisticated way.

General ordering data

Type	PS 4 F.STB 4	Version
Order No.	0299600000	Accessories, Test plug
GTIN (EAN)	4008190074043	
Qty.	20 pc(s).	

SAK Series
SAKT 1/DU1

Weidmüller Interface GmbH & Co. KG
Klingenbergstraße 26
D-32758 Detmold
Germany
Fon: +49 5231 14-0
Fax: +49 5231 14-292083
www.weidmueller.com

Accessories

End brackets

Klippon® Connect with clamping yoke Technology
The high reliability and variety of designs of the terminal blocks with clamping yoke connections make planning easer and optimises operational safety. Klippon® Connect provides a proven response to a range of different requirements.

General ordering data

Type	WEW 35/1	Version
Order No.	1059000000	W-Series, End bracket
GTIN (EAN)	4008190172282	
Qty.	50 pc(s).	
Type	WEW 35/2	Version
Order No.	1061200000	W-Series, End bracket
GTIN (EAN)	4008190030230	
Qty.	100 pc(s).	

Shorting link

Current and voltage transformer wiring
Our test disconnect terminal blocks featuring spring and screw connection technology allow you to create all the important converter circuits for measuring current, voltage and power in a safe and sophisticated way.

General ordering data

Type	QVS 2/S SAKT1+2	Version
Order No.	0358460000	SAK Series, Cross-connector, Cross-connector, Number of poles: 2
GTIN (EAN)	4008190157937	
Qty.	20 pc(s).	
Type	QVS 3 SAKT1+2	Version
Order No.	0329300000	SAK Series, Cross-connector, Cross-connector, Number of poles: 3
GTIN (EAN)	4008190084714	
Qty.	20 pc(s).	
Type	QVSK 2 SAKT1	Version
Order No.	1670360000	SAK Series, Cross-connector, Cross-connector, Number of poles: 2
GTIN (EAN)	4008190431242	
Qty.	20 pc(s).	
Type	QVS 2 SAKT1+2	Version
Order No.	0307300000	SAK Series, Cross-connector, Cross-connector, Number of poles: 2
GTIN (EAN)	4008190036140	
Qty.	20 pc(s).	

SAK Series
SAKT 1/DU1

Weidmüller Interface GmbH & Co. KG
Klingenbergstraße 26
D-32758 Detmold
Germany
Fon: +49 5231 14-0
Fax: +49 5231 14-292083
www.weidmueller.com

Accessories

Custom printing

The Dekafix (DEK) marker is the universal marker for all conductor and plug-in connectors as well as for electronic sub-assemblies. The system is ideal for short number sequences and covers a wide range of ready-printed markers.
Strips for fast installation in only one work step. The printing is easy to read, rich in contrast and available in various widths.

- Large range of ready-to-use markers
- Strips for fast installation
- Terminal markers, suitable for all Weidmüller cable connectors
- Available as blank MultiCard or with standard printing

For custom printing: Please send us a file of our labeling software M-Print PRO or M-Print PRO Online (without installation) for your labeling specifications.

General ordering data

Type	DEK 5/6.5 MC SDR	Version
Order No.	1609850000	Dekafix, Terminal marker, 5 x 6.5 mm, Pitch in mm (P): 6.50
GTIN (EAN)	4008190456610	Weidmueller, To customer specification
Qty.	180 pc(s).	

Fixing screws

Current and voltage transformer wiring
Our test disconnect terminal blocks featuring spring and screw connection technology allow you to create all the important converter circuits for measuring current, voltage and power in a safe and sophisticated way.

General ordering data

Type	BS 25 IH/SW SAKT1	Version
Order No.	0335200000	SAK Series, Set of fixings
GTIN (EAN)	4008190114039	
Qty.	50 pc(s).	
Type	BS 25 IH/RT SAKT1	Version
Order No.	0335500000	SAK Series, Set of fixings
GTIN (EAN)	4008190118877	
Qty.	50 pc(s).	
Type	BS 25 IH/GR SAKT1	Version
Order No.	0335300000	SAK Series, Set of fixings
GTIN (EAN)	4008190136864	
Qty.	50 pc(s).	

SAK Series
SAKT 1/DU1

Weidmüller Interface GmbH & Co. KG
Klingenbergstraße 26
D-32758 Detmold
Germany
Fon: +49 5231 14-0
Fax: +49 5231 14-292083
www.weidmueller.com

Accessories

Type	BS 25 IH/GE SAKT1	Version
Order No.	0335700000	SAK Series, Set of fixings
GTIN (EAN)	4008190189235	
Qty.	50 pc(s).	

Connection sleeves

VH 12/4.9/3.3 024900

Klippon® Connect with clamping yoke Technology
The high reliability and variety of designs of the terminal blocks with clamping yoke connections make planning easer and optimises operational safety. Klippon® Connect provides a proven response to a range of different requirements.

General ordering data

Type	VH 12/4.9/3.3 SAK6N	Version
Order No.	0249000000	SAK Series, Connecting sleeve, for cross-connection link, Number of poles:
GTIN (EAN)	4008190129507	
Qty.	100 pc(s).	
Type	VH 19/6/4.2 SAKT1	Version
Order No.	0318000000	SAK Series, Connecting sleeve, for cross-connection link, Number of poles: 1
GTIN (EAN)	4008190059460	
Qty.	50 pc(s).	

Test sockets

Current and voltage transformer wiring
Our test disconnect terminal blocks featuring spring and screw connection technology allow you to create all the important converter circuits for measuring current, voltage and power in a safe and sophisticated way.

General ordering data

Type	STB 21.6/IH/BL WTL6/3	Version
Order No.	1071080000	Accessories, Socket
GTIN (EAN)	4008190043957	
Qty.	50 pc(s).	
Type	STB 36.8/IH/DB WTL6/1	Version
Order No.	1847740000	Accessories, Socket
GTIN (EAN)	4032248379187	
Qty.	50 pc(s).	
Type	STB 21.6/IH/GN WTL6/3	Version
Order No.	1071020000	Accessories, Socket
GTIN (EAN)	4008190259228	
Qty.	50 pc(s).	

Weidmüller

SAK Series
SAKT 1/DU1

Weidmüller Interface GmbH & Co. KG
Klingenbergstraße 26
D-32758 Detmold
Germany
Fon: +49 5231 14-0
Fax: +49 5231 14-292083
www.weidmueller.com

Accessories

Type	STB 21.6/IH/GE WTL6/3	Version
Order No.	1071010000	Accessories, Socket
GTIN (EAN)	4008190259211	
Qty.	50 pc(s).	
Type	STB 36.8/IH/GE WTL6/1	Version
Order No.	1847760000	Accessories, Socket
GTIN (EAN)	4032248379170	
Qty.	50 pc(s).	
Type	STB 21.6/IH/RT WTL6/3	Version
Order No.	1778990000	Accessories, Socket
GTIN (EAN)	4032248169665	
Qty.	50 pc(s).	
Type	STB 21.6/IH/DB WTL6/3	Version
Order No.	1071000000	Accessories, Socket
GTIN (EAN)	4008190259204	
Qty.	50 pc(s).	
Type	STB 36.8/IH/GN WTL6/1	Version
Order No.	1847770000	Accessories, Socket
GTIN (EAN)	4032248379163	
Qty.	50 pc(s).	
Type	STB 21.6/IH/VI WTL6/3	Version
Order No.	1071030000	Accessories, Socket
GTIN (EAN)	4008190259235	
Qty.	50 pc(s).	
Type	STB 21.6/IH/SW WTL6/3	Version
Order No.	1071040000	Accessories, Socket
GTIN (EAN)	4008190859985	
Qty.	50 pc(s).	
Type	STB 36.8/IH/VI WTL6/1	Version
Order No.	1847780000	Accessories, Socket
GTIN (EAN)	4032248379156	
Qty.	50 pc(s).	
Type	STB 36.8/IH/BL WTL6/1	Version
Order No.	1847790000	Accessories, Socket
GTIN (EAN)	4032248379149	
Qty.	50 pc(s).	

SAK Series
SAKT 1/DU1

Weidmüller Interface GmbH & Co. KG
Klingenbergstraße 26
D-32758 Detmold
Germany
Fon: +49 5231 14-0
Fax: +49 5231 14-292083
www.weidmueller.com

Accessories

End brackets

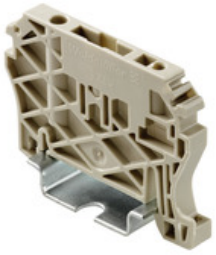

Spring connection with tension clamp Technology
Tension clamp technology is a universal contact system for all common conductor connection types. Its fantastic level of flexibility makes the tension clamp a profitable alternative connection.

General ordering data

Type	ZEW 35/2	Version
Order No.	8630740000	Z-series, End bracket
GTIN (EAN)	4032248348916	
Qty.	20 pc(s).	
Type	ZEW 15	Version
Order No.	7920340000	Accessories, End bracket
GTIN (EAN)	4032248238910	
Qty.	20 pc(s).	
Type	ZEW 35	Version
Order No.	9540000000	Z-series, End bracket
GTIN (EAN)	4008190956264	
Qty.	20 pc(s).	

End plates

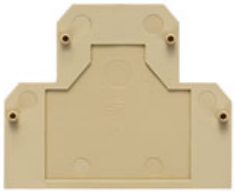

Klippon® Connect with clamping yoke Technology
The high reliability and variety of designs of the terminal blocks with clamping yoke connections make planning easer and optimises operational safety. Klippon® Connect provides a proven response to a range of different requirements.

General ordering data

Type	TW SAKB/C/T1	Version
Order No.	0242960000	SAK Series, Seperation plate, 1.5 mm, beige, Direct mounting
GTIN (EAN)	4008190104092	
Qty.	20 pc(s).	
Type	AP SAKB/C/T KRG	Version
Order No.	0146720000	SAK Series, End plate, 3 mm, dark beige, yellow, Direct mounting
GTIN (EAN)	4008190027995	
Qty.	20 pc(s).	