Data sheet | Item number: 890-1904

3-way distribution connector; 2-pole; Cod. I; 1 input; 3 outputs; blue

www.wago.com/890-1904

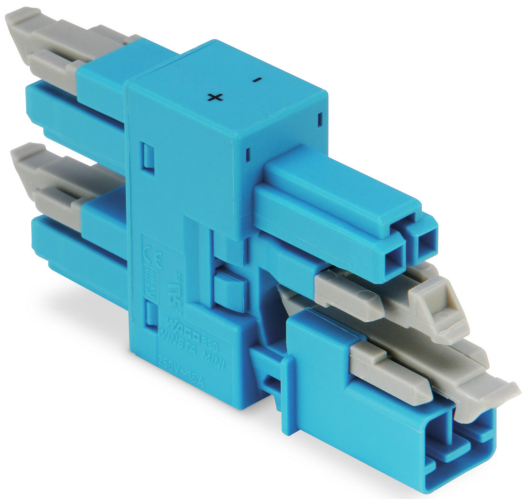

RoHS ✓ Compliant

BOMcheck.net

Color:

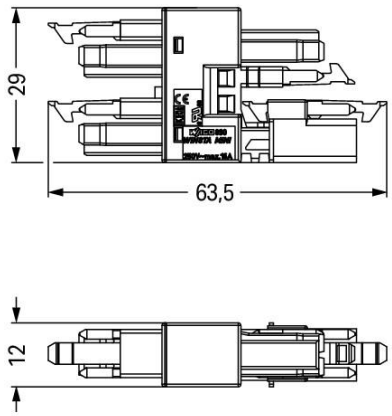

Item description

- Protected against mismating and maintenance-free
- Compact design with 4.4 mm pole spacing

Note:
All connectors for mounted installations (snap-in versions for lighting fixtures or devices, all types of PCB and distribution connectors) are factory-equipped with locking levers to ensure plugs and sockets are securely locked. Additional locking levers are only required for flying leads (plug /socket).

Note on mismating protection:

All WINSTA® components are 100% protected against mismating when:
a.) plugging different numbers of poles
b.) plugging while rotated 180
c.) plugging while laterally staggered
d.) plugging one pole

Safety information 1:

Subject to changes. Please also observe the further product documentation!

WAGO Kontakttechnik GmbH & Co. KG
Hansastr. 27
32423 Minden
Phone: +49571 887-0 | Fax: +49571 887-169
Email: info.de@wago.com | Web: www.wago.com

Do you have any questions about our products?
We are always happy to take your call at +49 (571) 887-44222.

Application note for the U.S. market (USR): Some versions may also be used for current interruption in accordance with the UL certificate in select applications with currents below 5 A and voltages up to 600 V. For further information, please contact your local sales office.

Data

Electrical data

Note on Contact Resistance	approx. 1 mΩ of contact resistance approx. 0.25 mΩ contact transition plug/socket

Ratings per IEC/EN 60664-1

Ratings per	IEC/EN 60664-1
Rated voltage (III / 3)	250 V
Rated impulse voltage (III / 3)	4 kV
Rated current	16 A
Legend (ratings)	(III / 3) ≙ Overvoltage category III / Pollution degree 3

Approvals per UL 1977

Rated voltage per UL 1977 (factory wiring only)	600 V
Rated current per UL 1977 (factory wiring only)	14 A

Connection data

No. of poles	2
Total number of potentials	2

Geometrical Data

Pin spacing	4,4 mm / 0.173 inch
Width	12 mm / 0.472 inch
Height	29 mm / 1.142 inch
Depth	63,5 mm / 2.5 inch

Mechanical data

Technologie	DALI
Coding	I
Mating force of a plug-in connection	approx. 20 … 70 N (depending on pole number)
Retention force of a plug-in connection	When locked: > 80 N
Unmating force of a plug-in connection	when unlocked: approx. 20 … 70 N (depending on pole number)
Number of mating cycles	

Subject to changes. Please also observe the further product documentation!

WAGO Kontakttechnik GmbH & Co. KG
Hansastr. 27
32423 Minden
Phone: +49571 887-0 | Fax: +49571 887-169
Email: info.de@wago.com | Web: www.wago.com

Do you have any questions about our products?
We are always happy to take your call at +49 (571) 887-44222.

	200, without resistive load
	100, with resistive load I_N = 16 A, tested (1.5mm²/AWG 16)

Type of distribution connector	Distribution connector, 3-way,
Marking	+ -
Protection class	IP20
Note on protection class	IP40 when mated
Potential marking	+ -
Application	Lighting management

Plug connection

Contact type (pluggable connector)	Socket/plug
Mismating protection	Yes
Locking of plug-in connection	locking lever
Locking lever	yes

Material Data

Color	blue
Insulating material	Polyamide 66 (PA 66)
Contact material	Copper or copper alloy (surface-treated)
Weight	11.9 g

Environmental Requirements

Processing temperature	-5 … +40 °C
Continuous operating temperature	-35 … +85 °C
Note on Continuous Service Temperature	Insulating parts for temperatures ≤ 105 °C

Commercial data

Packaging type	BOX
Country of origin	DE
GTIN	4055143608718
Customs Tariff No.	85366990990

Approvals / Certificates

UL-Approvals

Subject to changes. Please also observe the further product documentation!

WAGO Kontakttechnik GmbH & Co. KG
Hansastr. 27
32423 Minden
Phone: +49571 887-0 | Fax: +49571 887-169
Email: info.de@wago.com | Web: www.wago.com

Do you have any questions about our products?
We are always happy to take your call at +49 (571) 887-44222.

Logo	Approval	Additional Approval Text	Certificate name
	cURus Underwriters Laboratories Inc.	UL 1977	E45171

Counterpart

	Item no.890-1102 Socket; 2-pole; Cod. I; 1,50 mm²; blue	www.wago.com/890-1102
	Item no.890-1112 Plug; 2-pole; 1,50 mm²; blue	www.wago.com/890-1112
	Item no.891-8982/006-101 pre-assembled interconnecting cable; Eca; Socket/plug; 2-pole; Cod. I; H05VV-F 2 x 1.5 mm²; 1 m; 1,50 mm²; blue	www.wago.com/891-8982/006-101
	Item no.891-8982/106-101 pre-assembled connecting cable; Eca; Socket/open-ended; 2-pole; Cod. I; H05VV-F 2 x 1.5 mm²; 1 m; 1,50 mm²; blue	www.wago.com/891-8982/106-101
	Item no.891-8982/206-101 pre-assembled connecting cable; Eca; Plug/open-ended; 2-pole; Cod. I; H05VV-F 2 x 1.5 mm²; 1 m; 1,50 mm²; blue	www.wago.com/891-8982/206-101

Compatible products

assembling

	Item no.: 890-1622 Mounting plate; for h-distribution connectors; 2-pole; black	www.wago.com/890-1622
	Item no.: 890-1672 Mounting plate; for h-distribution connectors; 2-pole; white	www.wago.com/890-1672

Installation Notes

Installation

Subject to changes. Please also observe the further product documentation!

WAGO Kontakttechnik GmbH & Co. KG
Hansastr. 27
32423 Minden
Phone: +49571 887-0 | Fax: +49571 887-169
Email: info.de@wago.com | Web: www.wago.com

Do you have any questions about our products?
We are always happy to take your call at +49 (571) 887-44222.

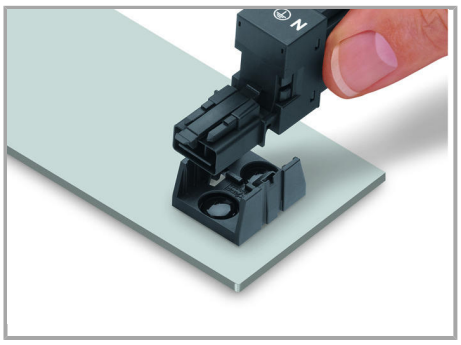

Secure the mounting plate via pins.

Product family

WINSTA® MINI
Show all products from the family

Subject to changes. Please also observe the further product documentation!

WAGO Kontakttechnik GmbH & Co. KG
Hansastr. 27
32423 Minden
Phone: +49571 887-0 | Fax: +49571 887-169
Email: info.de@wago.com | Web: www.wago.com

Do you have any questions about our products?
We are always happy to take your call at +49 (571) 887-44222.