Data sheet | Item number: 858-189

Basic relay; Nominal input voltage: 230 VAC; 2 changeover contacts; Limiting continuous current: 12 A; with manual operation; Module width: 22 mm

www.wago.com/858-189

Similiar to picture

RoHS ✓ Compliant

BOMcheck.net

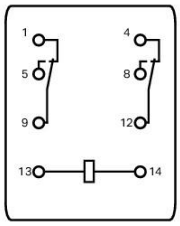

Subject to changes. Please also observe the further product documentation!

WAGO Kontakttechnik GmbH & Co. KG
Hansastr. 27
32423 Minden
Phone: +49571 887-0 | Fax: +49571 887-169
Email: info.de@wago.com | Web: www.wago.com

Do you have any questions about our products?
We are always happy to take your call at +49 (571) 887-44222.

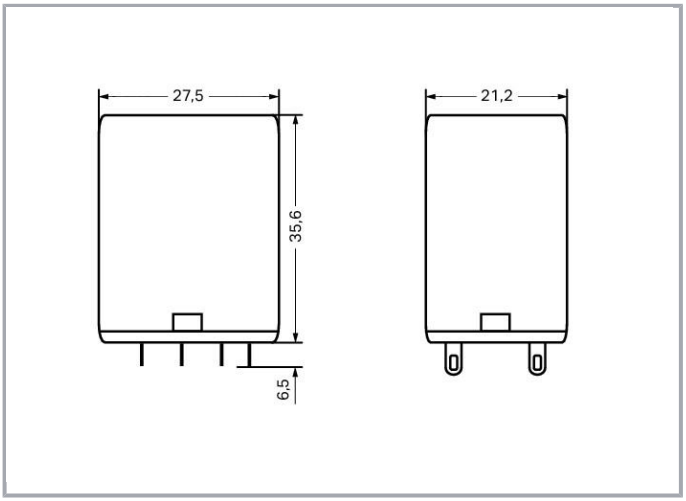

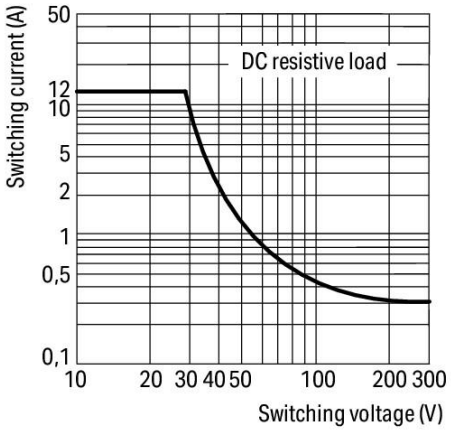

DC load limit curve

Data
Technical Data

Control circuit

Nominal input voltage U_N	AC 230 V
Nominal input current at U_N	11 mA

Load circuit:

Number of changeover/switchover contacts	2
Contact material (relay)	AgNi
Limiting continuous current	12 A
Max. make current (resistive)	(AC) 24 A / 4 s
Max. switching voltage	AC 250 V
Max. switching power (resistive)	AC 3000 VA; DC see load limit curve
Switching capacity	AC-15: 1.5 A / AC 240 V; DC-13: 0.1 A / DC 250 V
Recommended minimum load	10 V / 5 mA / 300 mW
Pull-in time (typ.)	10 ms
Drop-out time (typ.)	8 ms
Electrical life (N.O.; resistive load; 23 °C)	100 x 10^3 switching operations
Mechanical life	20 x 10^6 switching operations
Max. switching load with load/without load	20 min^{-1} / 200 min^{-1}

Subject to changes. Please also observe the further product documentation!

WAGO Kontakttechnik GmbH & Co. KG
Hansastr. 27
32423 Minden
Phone: +49571 887-0 | Fax: +49571 887-169
Email: info.de@wago.com | Web: www.wago.com

Do you have any questions about our products?
We are always happy to take your call at +49 (571) 887-44222.

Signaling

Status indication	LED red Mechanical

Safety and protection:

Dielectric strength, control/load circuit (AC, 1 min)	2.5 kVrms
Dielectric strength open contact (AC, 1 min)	1.5 kVrms
Dielectric strength, load/load circuit (AC, 1 min)	2.5 kVrms
Protection class	IP20

Geometrical Data

Width	21.2 mm / 0.835 inch
Height from the surface	35.6 mm / 1.402 inch
Depth	27.5 mm / 1.083 inch

Mechanical data

Type of mounting	Pluggable module

Material Data

Weight	31.5 g

Environmental Requirements

Surrounding air (operating) temperature at U_N	-40 … 55 °C
Surrounding air (storage) temperature	-40 … 85 °C

Standards and specifications

Standards/specifications	EN 61810-1

Commercial data

Packaging type	BOX
Country of origin	DE
GTIN	4055143693264
Customs Tariff No.	85364900990

Subject to changes. Please also observe the further product documentation!

WAGO Kontakttechnik GmbH & Co. KG
Hansastr. 27
32423 Minden
Phone: +49571 887-0 | Fax: +49571 887-169
Email: info.de@wago.com | Web: www.wago.com

Do you have any questions about our products?
We are always happy to take your call at +49 (571) 887-44222.

Counterpart

Downloads

Documentation

Additional Information

Disposal; Electrical and electronic equipment, Packaging	V 1.0.0	pdf 265.8 kB	Download

Installation Notes

Subject to changes. Please also observe the further product documentation!

WAGO Kontakttechnik GmbH & Co. KG
Hansastr. 27
32423 Minden
Phone: +49571 887-0 | Fax: +49571 887-169
Email: info.de@wago.com | Web: www.wago.com

Do you have any questions about our products?
We are always happy to take your call at +49 (571) 887-44222.