Snap-in plug; 5-pole; Cod. B; 4,00 mm²; gray

www.wago.com/770-755/062-000

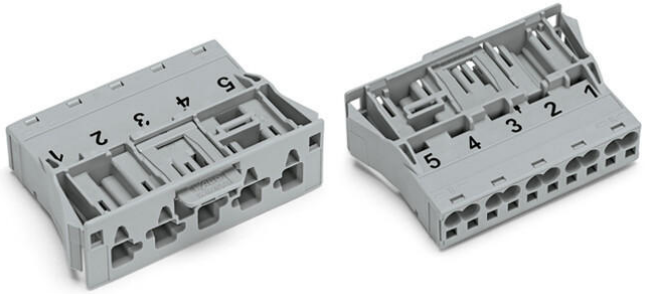

RoHS ✓ Compliant

BOMcheck.net

Color:

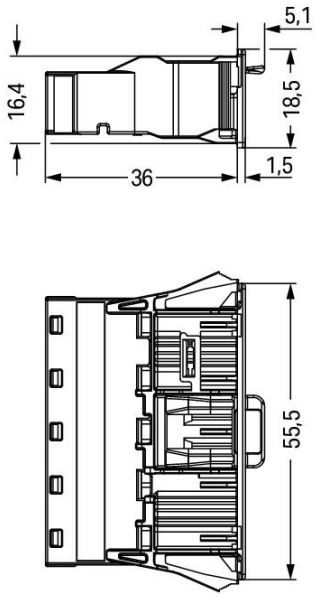

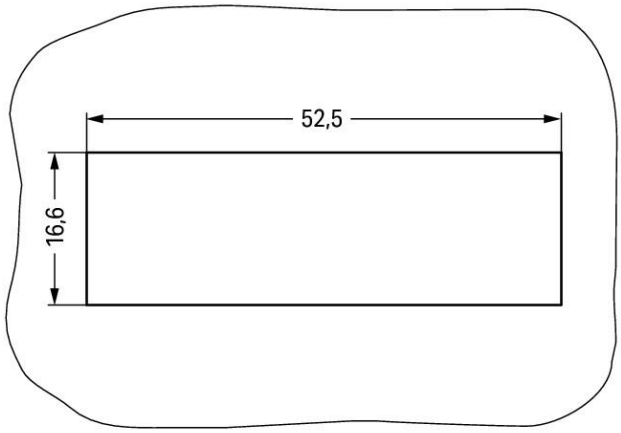

Plate thickness: 0.5 ... 2 mm
Cutout tolerance: + 0.1 mm

Subject to changes. Please also observe the further product documentation!

WAGO Kontakttechnik GmbH & Co. KG
Hansastr. 27
32423 Minden
Phone: +49571 887-0 | Fax: +49571 887-169
Email: info.de@wago.com | Web: www.wago.com

Do you have any questions about our products?
We are always happy to take your call at +49 (571) 887-44222.

Item description

- Protected against mismating and maintenance-free
- Push-in CAGE CLAMP® spring pressure connection technology allows solid conductors to be simply pushed into a unit
- Two-wire connection per pole for loops or bridges
- Additional variable coding is possible
- Components can be clearly printed on and color-coded to meet custom requirements

Note:
All connectors for mounted installations (snap-in versions for lighting fixtures or devices, all types of PCB and distribution connectors) are factory-equipped with locking levers to ensure plugs and sockets are securely locked. Additional locking levers are only required for flying leads (plug /socket).
Note on mismating protection:
All WINSTA® components are 100% protected against mismating when:
a.) plugging different numbers of poles
b.) plugging while rotated 180
c.) plugging while laterally staggered
d.) plugging one pole
Safety information 1:
Application note for the U.S. market (USR): Some versions may also be used for current interruption in accordance with the UL certificate in select applications with currents below 16 A and voltages up to 600 V. For further information, please contact your local sales office.

Data
Electrical data

Note on Contact Resistance	approx. 1 mΩ of contact resistance approx. 0.25 mΩ contact transition plug/socket

Ratings per IEC/EN 60664-1

Ratings per	IEC/EN 60664-1
Rated voltage (III / 3)	400 V
Rated impulse voltage (III / 3)	6 kV
Rated current	25 A
Legend (ratings)	(III / 3) ≙ Overvoltage category III / Pollution degree 3

Approvals per UL 1977

Rated voltage per UL 1977 (factory wiring only)	600 V
Rated current per UL 1977 (factory wiring only)	23 A

Subject to changes. Please also observe the further product documentation!

WAGO Kontakttechnik GmbH & Co. KG
Hansastr. 27
32423 Minden
Phone: +49571 887-0 | Fax: +49571 887-169
Email: info.de@wago.com | Web: www.wago.com

Do you have any questions about our products?
We are always happy to take your call at +49 (571) 887-44222.

Connection data

Connection technology	Push-in CAGE CLAMP®
Actuation type	Operating tool Push-in
Nominal cross section	4 mm²
Solid conductor	0,5 … 4 mm² / 20 … 12 AWG
Solid conductor, push-in termination	1,5 … 4 mm² / 16 … 12 AWG
Stranded conductor	0,5 … 2,5 mm² / 20 … 14 AWG
Fine-stranded conductor	0,5 … 4 mm² / 20 … 12 AWG
Fine-stranded conductor with ferrule with plastic collar	0,25 … 1,5 mm² / 20 … 16 AWG
Fine-stranded conductor with ferrule without plastic collar	0,25 … 2,5 mm² / 20 … 14 AWG
Fine-stranded conductor with ferrule, push-in termination, from	1,5 mm² / 16 AWG
Strip length	9 mm / 0.35 inch
Note (strip length)	see also packaging or instructions
No. of poles	5
Total number of connection points	10
Total number of potentials	5
Conductor entry direction to mating direction	0 °

Geometrical Data

Pin spacing	10 mm / 0.394 inch
Width	55,5 mm / 2.185 inch
Height	18,5 mm / 0.728 inch
Depth	36 mm / 1.417 inch

Mechanical data

Coding	B
Mating force of a plug-in connection	approx. 20 … 70 N (depending on pole number)
Retention force of a plug-in connection	Locked: > 80 N
Unmating force of a plug-in connection	Unlocked: approx. 20 … 70 N (depending on pole number)
Number of mating cycles	200, without resistive load 100, with resistive load I_N = 25 A, tested (4 mm²/AWG 12)
Gehäuseblechstärke	0,5 … 2 mm / 0.02 … 0.079 inch

Subject to changes. Please also observe the further product documentation!

WAGO Kontakttechnik GmbH & Co. KG
Hansastr. 27
32423 Minden
Phone: +49571 887-0 | Fax: +49571 887-169
Email: info.de@wago.com | Web: www.wago.com

Do you have any questions about our products?
We are always happy to take your call at +49 (571) 887-44222.

Mounting type	Snap-in
Marking	N PE 3 2 1
Protection class	IP20
Note on protection class	Only when mated (these compact connectors are not designed for use in open, easily accessible areas).
Potential marking	N PE 3 2 1

Plug connection

Contact type (pluggable connector)	Male connector/plug
Connector connection type	for conductor
Mismating protection	Yes
Locking of plug-in connection	locking lever
Locking lever	yes

Material Data

Color	gray
Insulating material	Polyamide 66 (PA 66)
Clamping spring material	Chrome nickel spring steel (CrNi)
Contact material	Copper or copper alloy (surface-treated)
Fire load	0.364 MJ
Weight	18 g

Environmental Requirements

Processing temperature	-5 … +40 °C
Continuous operating temperature	-35 … +85 °C
Note on Continuous Service Temperature	Insulating parts for temperatures ≤ 105 °C

Commercial data

Packaging type	BOX
Country of origin	DE
GTIN	4055143594318
Customs Tariff No.	85366990990

Approvals / Certificates

UL-Approvals

Logo	Approval	Additional Approval Text	Certificate name

Subject to changes. Please also observe the further product documentation!

WAGO Kontakttechnik GmbH & Co. KG
Hansastr. 27
32423 Minden
Phone: +49571 887-0 | Fax: +49571 887-169
Email: info.de@wago.com | Web: www.wago.com

Do you have any questions about our products?
We are always happy to take your call at +49 (571) 887-44222.

cURus Underwriters Laboratories Inc.	UL 1977	E45171 Sec. 9

Counterpart

Item no.770-245/062-000
Socket; 5-pole; Cod. B; 4,00 mm²; gray

www.wago.com/770-245/062-000

Compatible products

tools

Item no.: 210-719
Operating tool; Blade: 2.5 x 0.4 mm; with a partially insulated shaft

www.wago.com/210-719

protection

Item no.: 770-360
Lockout cap; for plugs; 5-pole; separable; yellow

www.wago.com/770-360

Item no.: 770-645
Lockout cap; 5-pole; for cutouts; Plastic; black

www.wago.com/770-645

Item no.: 770-695
Lockout cap; 5-pole; for cutouts; Plastic; white

www.wago.com/770-695

Downloads

CAD/CAE-Data

CAD data

2D/3D Models 770-755/062-000	URL	Download

CAE data

EPLAN Data Portal 770-755/062-000	URL	Download
WSCAD Universe 770-755/062-000	URL	Download

Installation Notes

Subject to changes. Please also observe the further product documentation!

WAGO Kontakttechnik GmbH & Co. KG
Hansastr. 27
32423 Minden
Phone: +49571 887-0 | Fax: +49571 887-169
Email: info.de@wago.com | Web: www.wago.com

Do you have any questions about our products?
We are always happy to take your call at +49 (571) 887-44222.

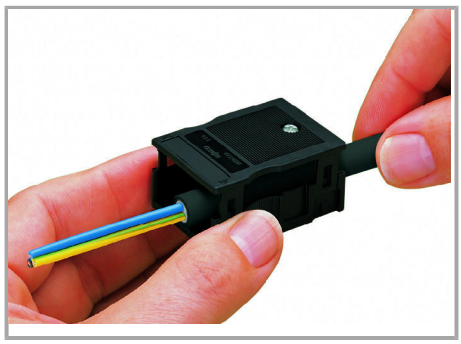

We recommend pulling the pre-latched strain relief housing over the cable prior to termination. However, the strain relief can be mounted at a later time as well.

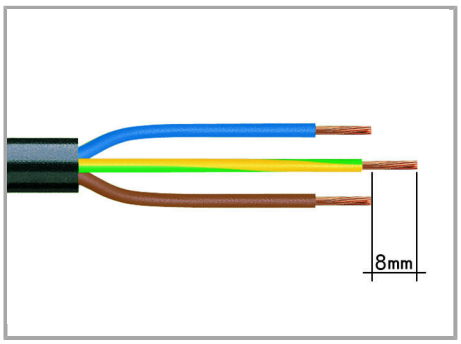

1. Strip length, outer insulation = 35 mm (2-pole), 55 mm (3- to 5-pole)

2. Strip length = 9 mm

3. Extended ground conductor = 8 mm

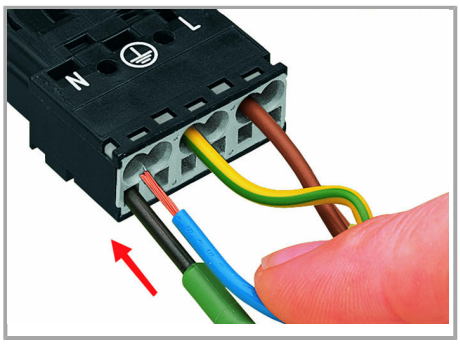

To terminate fine-stranded conductors, open the clamping unit via screwdriver (2.5 mm blade width) and insert stripped conductor until it hits backstop.

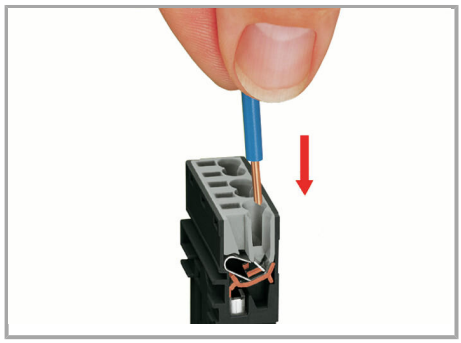

Insert stripped solid conductor until it hits backstop.

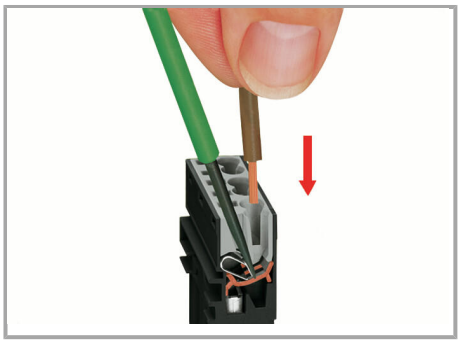

To terminate fine-stranded conductors, open the clamping unit via screwdriver (2.5 mm blade width) and insert stripped conductor until it hits backstop.

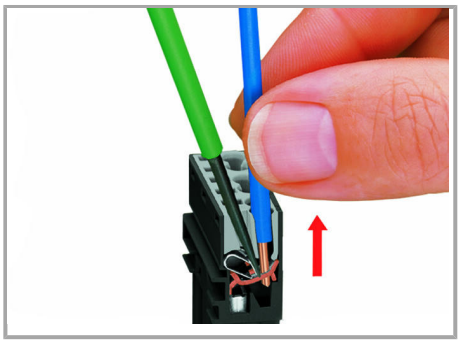

To remove the conductor, actuate the clamp via screwdriver (2.5 mm blade width) and pull out the conductor.

Product family

WINSTA® MIDI special
Show all products from the family

Subject to changes. Please also observe the further product documentation!

WAGO Kontakttechnik GmbH & Co. KG
Hansastr. 27
32423 Minden
Phone: +49571 887-0 | Fax: +49571 887-169
Email: info.de@wago.com | Web: www.wago.com

Do you have any questions about our products?
We are always happy to take your call at +49 (571) 887-44222.