Mounting plate; 5-pole; for distribution connectors; Plastic; black

www.wago.com/770-625

RoHS ✓ Compliant

BOMcheck.net

Color: ■

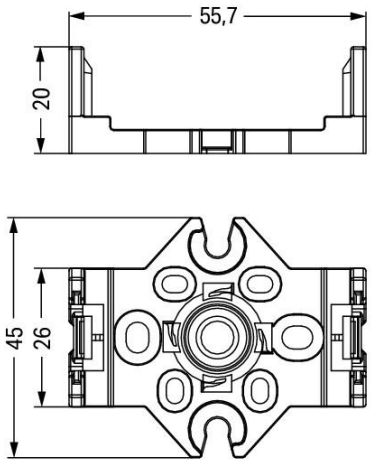

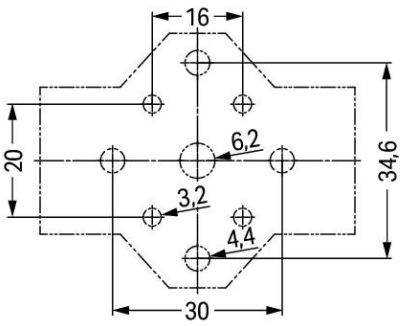

Data

Mechanical data

Mounting type	Screw mounting
Suitable	for distribution connector (except T-distribution connector); 5-pole

Subject to changes. Please also observe the further product documentation!

WAGO Kontakttechnik GmbH & Co. KG
Hansastr. 27
32423 Minden
Phone: +49571 887-0 | Fax: +49571 887-169
Email: info.de@wago.com | Web: www.wago.com

Do you have any questions about our products?
We are always happy to take your call at +49 (571) 887-44222.

Material Data

Color	black
Insulating material	Polyamide 66 (PA 66)
Flammability class per UL94	V0
Fire load	0.195 MJ
Weight	6.4 g

Environmental Requirements

Processing temperature	-5 … +40 °C
Continuous operating temperature	-35 … +85 °C
Note on Continuous Service Temperature	Insulating parts for temperatures ≤ 105 °C

Commercial data

Product Group	20 (WINSTA)
Packaging type	BOX
Country of origin	DE
GTIN	4017332755399
Customs Tariff No.	39269097900

Counterpart

Compatible products

assembling

Item no.: 770-601 Fixing pin; 6 mm Ø, for 1.0 … 2.5 mm mounting plates; Plastic; black	www.wago.com/770-601
Item no.: 890-601 Fixing pin; 6 mm Ø, for 1.0 … 2.5 mm mounting plates; Plastic; black	www.wago.com/890-601

Downloads
CAD/CAE-Data

CAD data

2D/3D Models 770-625	URL	Download

CAE data

Subject to changes. Please also observe the further product documentation!

WAGO Kontakttechnik GmbH & Co. KG
Hansastr. 27
32423 Minden
Phone: +49571 887-0 | Fax: +49571 887-169
Email: info.de@wago.com | Web: www.wago.com

Do you have any questions about our products?
We are always happy to take your call at +49 (571) 887-44222.

Installation Notes

Product family

WINSTA® MIDI
Show all products from the family

Subject to changes. Please also observe the further product documentation!

WAGO Kontakttechnik GmbH & Co. KG
Hansastr. 27
32423 Minden
Phone: +49571 887-0 | Fax: +49571 887-169
Email: info.de@wago.com | Web: www.wago.com

Do you have any questions about our products?
We are always happy to take your call at +49 (571) 887-44222.