Data sheet | Item number: 769-239/281-413

1-conductor/1-pin component carrier terminal block; LED (red); 24 VDC; for DIN-rail 35 x 15 and 35 x 7.5; 4 mm²; CAGE CLAMP®; 4,00 mm²; gray

www.wago.com/769-239/281-413

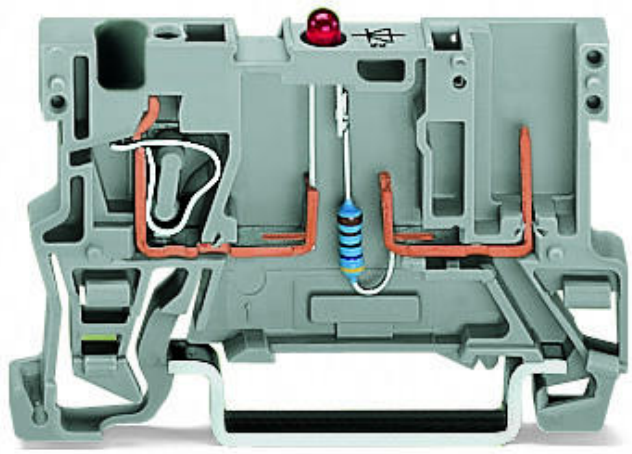

RoHS Compliant ✓ BOMcheck.net Color:

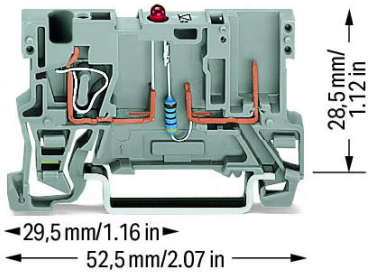

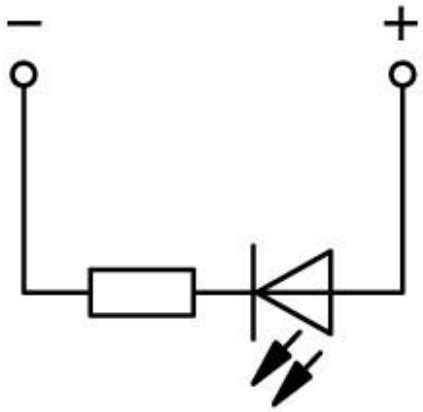

Data

Subject to changes. Please also observe the further product documentation!

WAGO Kontakttechnik GmbH & Co. KG
Hansastr. 27
32423 Minden
Phone: +49571 887-0 | Fax: +49571 887-169
Email: info.de@wago.com | Web: www.wago.com

Do you have any questions about our products?
We are always happy to take your call at +49 (571) 887-44222.

Electrical data

Voltage type (1)	DC
Nominal voltage	24 V

Ratings per IEC/EN 60664-1

Rated current	0.025 A

Connection data

Connection technology	CAGE CLAMP®
Actuation type	Open Tool Slot
Connectable conductor materials	Copper
Nominal cross section	4 mm²
Solid conductor	0.08 … 4 mm² / 28 … 12 AWG
Fine-stranded conductor	0.08 … 4 mm² / 28 … 12 AWG
Strip length	8 … 9 mm / 0.31 … 0.35 inch
Total number of connection points	1
Total number of potentials	1
Number of levels	1
Type of wiring	Front-entry wiring

Geometrical Data

Width	5 mm / 0.197 inch
Height from upper-edge of DIN-35 rail	28.5 mm / 1.122 inch
Depth	52.5 mm / 2.067 inch

Mechanical data

Design	horizontal
Type of mounting	DIN-35 rail
Marking level	Center marking

Material Data

Color	gray
Insulating material	Polyamide 66 (PA 66)
Fire load	0.099 MJ
Weight	5.3 g

Subject to changes. Please also observe the further product documentation!

WAGO Kontakttechnik GmbH & Co. KG
Hansastr. 27
32423 Minden
Phone: +49571 887-0 | Fax: +49571 887-169
Email: info.de@wago.com | Web: www.wago.com

Do you have any questions about our products?
We are always happy to take your call at +49 (571) 887-44222.

Commercial data

Product Group	18 (X-COM-System)
Packaging type	BOX
Country of origin	DE
GTIN	4045454619534
Customs Tariff No.	85369010000

Approvals / Certificates

Country specific Approvals

Logo	Approval	Additional Approval Text	Certificate name
	CCA DEKRA Certification B.V.	EN 60947	NTR NL-7626
	CSA DEKRA Certification B.V.	C22.2 No. 158	1101144
	KEMA/KEUR DEKRA Certification B.V.	EN 60947	2190419.01

Ship Approvals

Logo	Approval	Additional Approval Text	Certificate name
	ABS American Bureau of Shipping	EN 60947	20-HG1941090-PDA
	DNV GL Det Norske Veritas, Germanischer Lloyd	-	TAE00001V2

Counterpart

Subject to changes. Please also observe the further product documentation!

WAGO Kontakttechnik GmbH & Co. KG
Hansastr. 27
32423 Minden
Phone: +49571 887-0 | Fax: +49571 887-169
Email: info.de@wago.com | Web: www.wago.com

Do you have any questions about our products?
We are always happy to take your call at +49 (571) 887-44222.

Compatible products

Protective Warning Marker		
	Item no.: 280-415 Protective warning marker; with high-voltage symbol, black; for 5 terminal blocks; yellow	www.wago.com/280-415
General accessories		
	Item no.: 769-438 Pin cover; with marker slot for miniature WSB; gray	www.wago.com/769-438
	Item no.: 769-439 Pin cover; with marker slot for miniature WSB; orange	www.wago.com/769-439
	Item no.: 769-501 Start module for 1-conductor female connector; with integrated end plate; 4 mm²; 1-pole; 4,00 mm²; gray	www.wago.com/769-501
	Item no.: 769-501/000-006 Start module for 1-conductor female connector; 4 mm²; 1-pole; 4,00 mm²; blue	www.wago.com/769-501/000-006
	Item no.: 769-501/000-016 Start module for 1-conductor female connector; with integrated end plate; 4 mm²; 1-pole; 4,00 mm²; green-yellow	www.wago.com/769-501/000-016
	Item no.: 769-502 Center module for 1-conductor female connector; 4 mm²; 1-pole; 4,00 mm²; gray	www.wago.com/769-502
	Item no.: 769-502/000-006 Center module for 1-conductor female connector; 4 mm²; 1-pole; 4,00 mm²; blue	www.wago.com/769-502/000-006
	Item no.: 769-502/000-016 Center module for 1-conductor female connector; 4 mm²; 1-pole; 4,00 mm²; green-yellow	www.wago.com/769-502/000-016
	Item no.: 769-503 End module for 1-conductor female connector; 4 mm²; 1-pole; 4,00 mm²; gray	www.wago.com/769-503

Subject to changes. Please also observe the further product documentation!

WAGO Kontakttechnik GmbH & Co. KG
Hansastr. 27
32423 Minden
Phone: +49571 887-0 | Fax: +49571 887-169
Email: info.de@wago.com | Web: www.wago.com

Do you have any questions about our products?
We are always happy to take your call at +49 (571) 887-44222.

	Item no.: 769-503/000-006 End module for 1-conductor female connector; 4 mm²; 1-pole; 4,00 mm²; blue	www.wago.com/769-503/000-006
	Item no.: 769-503/000-016 End module for 1-conductor female connector; 4 mm²; 1-pole; 4,00 mm²; green-yellow	www.wago.com/769-503/000-016
	Item no.: 769-504 Start module for 2-conductor female connector; with integrated end plate; 4 mm²; 1-pole; 4,00 mm²; gray	www.wago.com/769-504
	Item no.: 769-504/000-006 Start module for 2-conductor female connector; with integrated end plate; 4 mm²; 1-pole; 4,00 mm²; blue	www.wago.com/769-504/000-006
	Item no.: 769-504/000-016 Start module for 2-conductor female connector; 4 mm²; 1-pole; 4,00 mm²; green-yellow	www.wago.com/769-504/000-016
	Item no.: 769-505 Center module for 2-conductor female connector; 4 mm²; 1-pole; 4,00 mm²; gray	www.wago.com/769-505
	Item no.: 769-505/000-006 Center module for 2-conductor female connector; 4 mm²; 1-pole; 4,00 mm²; blue	www.wago.com/769-505/000-006
	Item no.: 769-505/000-016 Center module for 2-conductor female connector; 4 mm²; 1-pole; 4,00 mm²; green-yellow	www.wago.com/769-505/000-016
	Item no.: 769-506 End module for 2-conductor female connector; 4 mm²; 1-pole; 4,00 mm²; gray	www.wago.com/769-506
	Item no.: 769-506/000-006 End module for 2-conductor female connector; 4 mm²; 1-pole; 4,00 mm²; blue	www.wago.com/769-506/000-006
	Item no.: 769-506/000-016 End module for 2-conductor female connector; 4 mm²; 1-pole; 4,00 mm²; green-yellow	www.wago.com/769-506/000-016
	Item no.: 769-512 Start module for 1-conductor female connector; angled; 4 mm²; 1-pole; 4,00 mm²; gray	www.wago.com/769-512
	Item no.: 769-512/000-006 Start module for 1-conductor female connector; angled; 4 mm²; 1-pole; 4,00 mm²; blue	www.wago.com/769-512/000-006
	Item no.: 769-512/000-016 Start module for 1-conductor female connector; angled; 4 mm²; 1-pole; 4,00 mm²; green-yellow	www.wago.com/769-512/000-016

Subject to changes. Please also observe the further product documentation!

WAGO Kontakttechnik GmbH & Co. KG
Hansastr. 27
32423 Minden
Phone: +49571 887-0 | Fax: +49571 887-169
Email: info.de@wago.com | Web: www.wago.com

Do you have any questions about our products?
We are always happy to take your call at +49 (571) 887-44222.

	Item no.: 769-513 Center module for 1-conductor female connector; angled; 4 mm²; 1-pole; 4,00 mm²; gray	www.wago.com/769-513
	Item no.: 769-513/000-006 Center module for 1-conductor female connector; angled; 4 mm²; 1-pole; 4,00 mm²; blue	www.wago.com/769-513/000-006
	Item no.: 769-513/000-016 Center module for 1-conductor female connector; angled; 4 mm²; 1-pole; 4,00 mm²; green-yellow	www.wago.com/769-513/000-016
	Item no.: 769-515 End module for 1-conductor female connector; angled; 4 mm²; 1-pole; 4,00 mm²; gray	www.wago.com/769-515
	Item no.: 769-515/000-006 End module for 1-conductor female connector; angled; 4 mm²; 1-pole; 4,00 mm²; blue	www.wago.com/769-515/000-006
	Item no.: 769-515/000-016 End module for 1-conductor female connector; angled; 4 mm²; 1-pole; 4,00 mm²; green-yellow	www.wago.com/769-515/000-016

Carrier rail

	Item no.: 210-112 Steel carrier rail; 35 x 7.5 mm; 1 mm thick; 2 m long; slotted; according to EN 60715; "Hole width 25 mm	www.wago.com/210-112
	Item no.: 210-113 Steel carrier rail; 35 x 7.5 mm; 1 mm thick; 2 m long; unslotted; according to EN 60715	www.wago.com/210-113
	Item no.: 210-114 Steel carrier rail; 35 x 15 mm; 1.5 mm thick; 2 m long; unslotted; similar to EN 60715	www.wago.com/210-114
	Item no.: 210-115 Steel carrier rail; 35 x 7.5 mm; 1 mm thick; 2 m long; slotted; according to EN 60715; "Hole width 18 mm	www.wago.com/210-115
	Item no.: 210-118 Steel carrier rail; 35 x 15 mm; 2.3 mm thick; 2 m long; unslotted; according to EN 60715	www.wago.com/210-118
	Item no.: 210-196 Aluminum carrier rail; 35 x 8.2 mm; 1.6 mm thick; 2 m long; unslotted; similar to EN 60715; silver-colored	www.wago.com/210-196
	Item no.: 210-197 Steel carrier rail; 35 x 15 mm; 1.5 mm thick; 2 m long; slotted; similar to EN 60715	www.wago.com/210-197
	Item no.: 210-198 Copper carrier rail; 35 x 15 mm; 2.3 mm thick; 2 m long; unslotted; according to EN 60715; copper-colored	www.wago.com/210-198
	Item no.: 210-504 Steel carrier rail; 35 x 7.5 mm; 1 mm thick; 2 m long; slotted; galvanized; according to EN 60715	www.wago.com/210-504
	Item no.: 210-505 Steel carrier rail; 35 x 7.5 mm; 1 mm thick; 2 m long; unslotted; galvanized; according to EN 60715	www.wago.com/210-505

Subject to changes. Please also observe the further product documentation!

WAGO Kontakttechnik GmbH & Co. KG
Hansastr. 27
32423 Minden
Phone: +49571 887-0 | Fax: +49571 887-169
Email: info.de@wago.com | Web: www.wago.com

Do you have any questions about our products?
We are always happy to take your call at +49 (571) 887-44222.

	Item no.: 210-506 Steel carrier rail; 35 x 15 mm; 1.5 mm thick; 2 m long; unslotted; galvanized; similar to EN 60715	www.wago.com/210-506
	Item no.: 210-508 Steel carrier rail; 35 x 15 mm; 1.5 mm thick; 2 m long; slotted; galvanized; similar to EN 60715	www.wago.com/210-508
tools		
	Item no.: 210-720 Operating tool; Blade: 3.5 x 0.5 mm; with a partially insulated shaft	www.wago.com/210-720
Test Accessories		
	Item no.: 210-136 Test plug; 2 mm Ø; with 500 mm cable; red	www.wago.com/210-136
	Item no.: 210-137 Test plug; 2.3 mm Ø; with 500 mm cable; yellow	www.wago.com/210-137
	Item no.: 280-418 Test plug module; modular; suitable for all WAGO 280 and 780 Series rail-mounted terminal blocks with jumper slots in the current bar; gray	www.wago.com/280-418
	Item no.: 280-419 Spacer module; modular; bridging commoned terminal blocks; gray	www.wago.com/280-419
ferrule		
	Item no.: 216-101 Ferrule; Sleeve for 0.5 mm² / AWG 22; uninsulated; electro-tin plated	www.wago.com/216-101
	Item no.: 216-102 Ferrule; Sleeve for 0.75 mm² / AWG 20; uninsulated; electro-tin plated	www.wago.com/216-102
	Item no.: 216-103 Ferrule; Sleeve for 1 mm² / AWG 18; uninsulated; electro-tin plated	www.wago.com/216-103
	Item no.: 216-104 Ferrule; Sleeve for 1.5 mm² / AWG 16; uninsulated; electro-tin plated	www.wago.com/216-104
	Item no.: 216-201 Ferrule; Sleeve for 0.5 mm² / 20 AWG; insulated; electro-tin plated; white	www.wago.com/216-201
	Item no.: 216-202 Ferrule; Sleeve for 0.75 mm² / 18 AWG; insulated; electro-tin plated; gray	www.wago.com/216-202
	Item no.: 216-203 Ferrule; Sleeve for 1 mm² / AWG 18; insulated; electro-tin plated; red	www.wago.com/216-203
	Item no.: 216-204 Ferrule; Sleeve for 1.5 mm² / AWG 16; insulated; electro-tin plated; black	www.wago.com/216-204
	Item no.: 216-206 Ferrule; Sleeve for 2.5 mm² / AWG 14; insulated; electro-tin plated; blue	www.wago.com/216-206
	Item no.: 216-301 Ferrule; Sleeve for 0.25 mm² / AWG 24; insulated; electro-tin plated; yellow	www.wago.com/216-301

Subject to changes. Please also observe the further product documentation!

WAGO Kontakttechnik GmbH & Co. KG
Hansastr. 27
32423 Minden
Phone: +49571 887-0 | Fax: +49571 887-169
Email: info.de@wago.com | Web: www.wago.com

Do you have any questions about our products?
We are always happy to take your call at +49 (571) 887-44222.

	Item no.: 216-302 Ferrule; Sleeve for 0.34 mm² / 22 AWG; insulated; electro-tin plated; green	www.wago.com/216-302
Insulation stop		
	Item no.: 769-470 Insulation stop; 0.08 - 0.2 mm² "s" (0.14 mm² "f-st"); 5 pieces/strip; white	www.wago.com/769-470
	Item no.: 769-471 Insulation stop; 0.25 - 0.5 mm²; 5 pieces/strip; light gray	www.wago.com/769-471
	Item no.: 769-472 Insulation stop; 0.75 - 1 mm²; 5 pieces/strip; dark gray	www.wago.com/769-472
End plate		
	Item no.: 769-307 End and intermediate plate; 1.1 mm thick; gray	www.wago.com/769-307
	Item no.: 769-308 End and intermediate plate; 1.1 mm thick; orange	www.wago.com/769-308
Jumper		
	Item no.: 249-123 Push-in type wire jumper; insulated; wire length 180 mm; Conductor cross section 0.75 mm²	www.wago.com/249-123
	Item no.: 249-125 Push-in type wire jumper; insulated; wire length 60 mm; Conductor cross section 0.75 mm²	www.wago.com/249-125
	Item no.: 249-126 Push-in type wire jumper; insulated; wire length 110 mm; Conductor cross section 0.75 mm²	www.wago.com/249-126
	Item no.: 249-127 Push-in type wire jumper; insulated; wire length 250 mm; Conductor cross section 0.75 mm²	www.wago.com/249-127
Female plug		
	Item no.: 769-101 1-conductor female plug; 4 mm²; 1-pole; 4,00 mm²; gray	www.wago.com/769-101
	Item no.: 769-101/000-006 1-conductor female plug; 4 mm²; 1-pole; 4,00 mm²; blue	www.wago.com/769-101 /000-006
	Item no.: 769-101/000-016 1-conductor female plug; 4 mm²; 1-pole; 4,00 mm²; green-yellow	www.wago.com/769-101 /000-016
	Item no.: 769-101/022-000 1-conductor female plug; angled; 4 mm²; 1-pole; 4,00 mm²; gray	www.wago.com/769-101 /022-000
	Item no.: 769-101/022-016 1-conductor female plug; angled; 4 mm²; 1-pole; 4,00 mm²; green-yellow	www.wago.com/769-101 /022-016

Subject to changes. Please also observe the further product documentation!

WAGO Kontakttechnik GmbH & Co. KG
Hansastr. 27
32423 Minden
Phone: +49571 887-0 | Fax: +49571 887-169
Email: info.de@wago.com | Web: www.wago.com

Do you have any questions about our products?
We are always happy to take your call at +49 (571) 887-44222.

	Item no.: 769-102 1-conductor female plug; 4 mm²; 2-pole; 4,00 mm²; gray	www.wago.com/769-102
	Item no.: 769-102/000-006 1-conductor female plug; 4 mm²; 2-pole; 4,00 mm²; blue	www.wago.com/769-102 /000-006
	Item no.: 769-102/000-036 1-conductor female plug; 4 mm²; 2-pole; 4,00 mm²; gray, green-yellow	www.wago.com/769-102 /000-036
	Item no.: 769-102/000-037 1-conductor female plug; 4 mm²; 2-pole; 4,00 mm²; green-yellow, gray	www.wago.com/769-102 /000-037
	Item no.: 769-102/022-000 1-conductor female plug; angled; 4 mm²; 2-pole; 4,00 mm²; gray	www.wago.com/769-102 /022-000
	Item no.: 769-103 1-conductor female plug; 4 mm²; 3-pole; 4,00 mm²; gray	www.wago.com/769-103
	Item no.: 769-103/000-006 1-conductor female plug; 4 mm²; 3-pole; 4,00 mm²; blue	www.wago.com/769-103 /000-006
	Item no.: 769-103/000-036 1-conductor female plug; 4 mm²; 3-pole; 4,00 mm²; gray, green-yellow	www.wago.com/769-103 /000-036
	Item no.: 769-103/000-037 1-conductor female plug; 4 mm²; 3-pole; 4,00 mm²; green-yellow, gray	www.wago.com/769-103 /000-037
	Item no.: 769-103/000-038 1-conductor female plug; 4 mm²; 3-pole; 4,00 mm²; gray, blue, green-yellow	www.wago.com/769-103 /000-038
	Item no.: 769-103/000-039 1-conductor female plug; 4 mm²; 3-pole; 4,00 mm²; green-yellow, blue, gray	www.wago.com/769-103 /000-039
	Item no.: 769-103/022-000 1-conductor female plug; angled; 4 mm²; 3-pole; 4,00 mm²; gray	www.wago.com/769-103 /022-000
	Item no.: 769-104 1-conductor female plug; 4 mm²; 4-pole; 4,00 mm²; gray	www.wago.com/769-104
	Item no.: 769-104/000-006 1-conductor female plug; 4 mm²; 4-pole; 4,00 mm²; blue	www.wago.com/769-104 /000-006

Subject to changes. Please also observe the further product documentation!

WAGO Kontakttechnik GmbH & Co. KG
Hansastr. 27
32423 Minden
Phone: +49571 887-0 | Fax: +49571 887-169
Email: info.de@wago.com | Web: www.wago.com

Do you have any questions about our products?
We are always happy to take your call at +49 (571) 887-44222.

	Item no.: 769-104/000-036 1-conductor female plug; 4 mm²; 4-pole; 4,00 mm²; gray, green-yellow	www.wago.com/769-104/000-036
	Item no.: 769-104/000-037 1-conductor female plug; 4 mm²; 4-pole; 4,00 mm²; green-yellow, gray	www.wago.com/769-104/000-037
	Item no.: 769-104/000-038 1-conductor female plug; 4 mm²; 4-pole; 4,00 mm²; gray, blue, green-yellow	www.wago.com/769-104/000-038
	Item no.: 769-104/000-039 1-conductor female plug; 4 mm²; 4-pole; 4,00 mm²; green-yellow, blue, gray	www.wago.com/769-104/000-039
	Item no.: 769-104/022-000 1-conductor female plug; angled; 4 mm²; 4-pole; 4,00 mm²; gray	www.wago.com/769-104/022-000
	Item no.: 769-105 1-conductor female plug; 4 mm²; 5-pole; 4,00 mm²; gray	www.wago.com/769-105
	Item no.: 769-105/000-006 1-conductor female plug; 4 mm²; 5-pole; 4,00 mm²; blue	www.wago.com/769-105/000-006
	Item no.: 769-105/000-036 1-conductor female plug; 4 mm²; 5-pole; 4,00 mm²; gray, green-yellow	www.wago.com/769-105/000-036
	Item no.: 769-105/000-037 1-conductor female plug; 4 mm²; 5-pole; 4,00 mm²; green-yellow, gray	www.wago.com/769-105/000-037
	Item no.: 769-105/000-038 1-conductor female plug; 4 mm²; 5-pole; 4,00 mm²; gray, blue, green-yellow	www.wago.com/769-105/000-038
	Item no.: 769-105/000-039 1-conductor female plug; 4 mm²; 5-pole; 4,00 mm²; green-yellow, blue, gray	www.wago.com/769-105/000-039
	Item no.: 769-105/022-000 1-conductor female plug; angled; 4 mm²; 5-pole; 4,00 mm²; gray	www.wago.com/769-105/022-000
	Item no.: 769-106 1-conductor female plug; 4 mm²; 6-pole; 4,00 mm²; gray	www.wago.com/769-106
	Item no.: 769-106/000-006 1-conductor female plug; 4 mm²; 6-pole; 4,00 mm²; blue	www.wago.com/769-106/000-006

Subject to changes. Please also observe the further product documentation!

WAGO Kontakttechnik GmbH & Co. KG
Hansastr. 27
32423 Minden
Phone: +49571 887-0 | Fax: +49571 887-169
Email: info.de@wago.com | Web: www.wago.com

Do you have any questions about our products?
We are always happy to take your call at +49 (571) 887-44222.

	Item no.: 769-106/000-036 1-conductor female plug; 4 mm²; 6-pole; 4,00 mm²; gray, green-yellow	www.wago.com/769-106/000-036
	Item no.: 769-106/000-037 1-conductor female plug; 4 mm²; 6-pole; 4,00 mm²; green-yellow, gray	www.wago.com/769-106/000-037
	Item no.: 769-106/000-038 1-conductor female plug; 4 mm²; 6-pole; 4,00 mm²; gray, blue, green-yellow	www.wago.com/769-106/000-038
	Item no.: 769-106/000-039 1-conductor female plug; 4 mm²; 6-pole; 4,00 mm²; green-yellow, blue, gray	www.wago.com/769-106/000-039
	Item no.: 769-106/022-000 1-conductor female plug; angled; 4 mm²; 6-pole; 4,00 mm²; gray	www.wago.com/769-106/022-000
	Item no.: 769-107 1-conductor female plug; 4 mm²; 7-pole; 4,00 mm²; gray	www.wago.com/769-107
	Item no.: 769-107/000-006 1-conductor female plug; 4 mm²; 7-pole; 4,00 mm²; blue	www.wago.com/769-107/000-006
	Item no.: 769-107/000-036 1-conductor female plug; 4 mm²; 7-pole; 4,00 mm²; gray, green-yellow	www.wago.com/769-107/000-036
	Item no.: 769-107/000-037 1-conductor female plug; 4 mm²; 7-pole; 4,00 mm²; green-yellow, gray	www.wago.com/769-107/000-037
	Item no.: 769-107/000-038 1-conductor female plug; 4 mm²; 7-pole; 4,00 mm²; gray, blue, green-yellow	www.wago.com/769-107/000-038
	Item no.: 769-107/000-039 1-conductor female plug; 4 mm²; 7-pole; 4,00 mm²; green-yellow, blue, gray	www.wago.com/769-107/000-039
	Item no.: 769-107/022-000 1-conductor female plug; angled; 4 mm²; 7-pole; 4,00 mm²; gray	www.wago.com/769-107/022-000
	Item no.: 769-108 1-conductor female plug; 4 mm²; 8-pole; 4,00 mm²; gray	www.wago.com/769-108
	Item no.: 769-108/000-006 1-conductor female plug; 4 mm²; 8-pole; 4,00 mm²; blue	www.wago.com/769-108/000-006

Subject to changes. Please also observe the further product documentation!

WAGO Kontakttechnik GmbH & Co. KG
Hansastr. 27
32423 Minden
Phone: +49571 887-0 | Fax: +49571 887-169
Email: info.de@wago.com | Web: www.wago.com

Do you have any questions about our products?
We are always happy to take your call at +49 (571) 887-44222.

	Item no.: 769-108/000-036 1-conductor female plug; 4 mm²; 8-pole; 4,00 mm²; gray, green-yellow	www.wago.com/769-108/000-036
	Item no.: 769-108/000-037 1-conductor female plug; 4 mm²; 8-pole; 4,00 mm²; green-yellow, gray	www.wago.com/769-108/000-037
	Item no.: 769-108/000-038 1-conductor female plug; 4 mm²; 8-pole; 4,00 mm²; gray, blue, green-yellow	www.wago.com/769-108/000-038
	Item no.: 769-108/000-039 1-conductor female plug; 4 mm²; 8-pole; 4,00 mm²; green-yellow, blue, gray	www.wago.com/769-108/000-039
	Item no.: 769-108/022-000 1-conductor female plug; angled; 4 mm²; 8-pole; 4,00 mm²; gray	www.wago.com/769-108/022-000
	Item no.: 769-109 1-conductor female plug; 4 mm²; 9-pole; 4,00 mm²; gray	www.wago.com/769-109
	Item no.: 769-109/000-006 1-conductor female plug; 4 mm²; 9-pole; 4,00 mm²; blue	www.wago.com/769-109/000-006
	Item no.: 769-109/000-036 1-conductor female plug; 4 mm²; 9-pole; 4,00 mm²; gray, green-yellow	www.wago.com/769-109/000-036
	Item no.: 769-109/000-037 1-conductor female plug; 4 mm²; 9-pole; 4,00 mm²; green-yellow, gray	www.wago.com/769-109/000-037
	Item no.: 769-109/000-038 1-conductor female plug; 4 mm²; 9-pole; 4,00 mm²; gray, blue, green-yellow	www.wago.com/769-109/000-038
	Item no.: 769-109/000-039 1-conductor female plug; 4 mm²; 9-pole; 4,00 mm²; green-yellow, blue, gray	www.wago.com/769-109/000-039
	Item no.: 769-109/022-000 1-conductor female plug; angled; 4 mm²; 9-pole; 4,00 mm²; gray	www.wago.com/769-109/022-000
	Item no.: 769-110 1-conductor female plug; 4 mm²; 10-pole; 4,00 mm²; gray	www.wago.com/769-110
	Item no.: 769-110/000-006 1-conductor female plug; 4 mm²; 10-pole; 4,00 mm²; blue	www.wago.com/769-110/000-006

Subject to changes. Please also observe the further product documentation!

WAGO Kontakttechnik GmbH & Co. KG
Hansastr. 27
32423 Minden
Phone: +49571 887-0 | Fax: +49571 887-169
Email: info.de@wago.com | Web: www.wago.com

Do you have any questions about our products?
We are always happy to take your call at +49 (571) 887-44222.

	Item no.: 769-110/000-036 1-conductor female plug; 4 mm²; 10-pole; 4,00 mm²; gray, green-yellow	www.wago.com/769-110/000-036
	Item no.: 769-110/000-037 1-conductor female plug; 4 mm²; 10-pole; 4,00 mm²; green-yellow, gray	www.wago.com/769-110/000-037
	Item no.: 769-110/000-038 1-conductor female plug; 4 mm²; 10-pole; 4,00 mm²; gray, blue, green-yellow	www.wago.com/769-110/000-038
	Item no.: 769-110/000-039 1-conductor female plug; 4 mm²; 10-pole; 4,00 mm²; green-yellow, blue, gray	www.wago.com/769-110/000-039
	Item no.: 769-110/022-000 1-conductor female plug; angled; 4 mm²; 10-pole; 4,00 mm²; gray	www.wago.com/769-110/022-000
	Item no.: 769-111 1-conductor female plug; 4 mm²; 11-pole; 4,00 mm²; gray	www.wago.com/769-111
	Item no.: 769-111/000-006 1-conductor female plug; 4 mm²; 11-pole; 4,00 mm²; blue	www.wago.com/769-111/000-006
	Item no.: 769-111/000-036 1-conductor female plug; 4 mm²; 11-pole; 4,00 mm²; gray, green-yellow	www.wago.com/769-111/000-036
	Item no.: 769-111/000-037 1-conductor female plug; 4 mm²; 11-pole; 4,00 mm²; green-yellow, gray	www.wago.com/769-111/000-037
	Item no.: 769-111/000-038 1-conductor female plug; 4 mm²; 11-pole; 4,00 mm²; gray, blue, green-yellow	www.wago.com/769-111/000-038
	Item no.: 769-111/000-039 1-conductor female plug; 4 mm²; 11-pole; 4,00 mm²; green-yellow, blue, gray	www.wago.com/769-111/000-039
	Item no.: 769-111/022-000 1-conductor female plug; angled; 4 mm²; 11-pole; 4,00 mm²; gray	www.wago.com/769-111/022-000
	Item no.: 769-112 1-conductor female plug; 4 mm²; 12-pole; 4,00 mm²; gray	www.wago.com/769-112
	Item no.: 769-112/000-006 1-conductor female plug; 4 mm²; 12-pole; 4,00 mm²; blue	www.wago.com/769-112/000-006

Subject to changes. Please also observe the further product documentation!

WAGO Kontakttechnik GmbH & Co. KG
Hansastr. 27
32423 Minden
Phone: +49571 887-0 | Fax: +49571 887-169
Email: info.de@wago.com | Web: www.wago.com

Do you have any questions about our products?
We are always happy to take your call at +49 (571) 887-44222.

	Item no.: 769-112/000-036 1-conductor female plug; 4 mm²; 12-pole; 4,00 mm²; gray, green-yellow	www.wago.com/769-112/000-036
	Item no.: 769-112/000-037 1-conductor female plug; 4 mm²; 12-pole; 4,00 mm2; green-yellow, gray	www.wago.com/769-112/000-037
	Item no.: 769-112/000-038 1-conductor female plug; 4 mm²; 12-pole; 4,00 mm²; gray, blue, green-yellow	www.wago.com/769-112/000-038
	Item no.: 769-112/000-039 1-conductor female plug; 4 mm²; 12-pole; 4,00 mm²; green-yellow, blue, gray	www.wago.com/769-112/000-039
	Item no.: 769-112/022-000 1-conductor female plug; angled; 4 mm²; 12-pole; 4,00 mm²; gray	www.wago.com/769-112/022-000
	Item no.: 769-113 1-conductor female plug; 4 mm²; 13-pole; 4,00 mm²; gray	www.wago.com/769-113
	Item no.: 769-113/000-036 1-conductor female plug; 4 mm²; 13-pole; 4,00 mm²; gray, green-yellow	www.wago.com/769-113/000-036
	Item no.: 769-113/000-037 1-conductor female plug; 4 mm²; 13-pole; 4,00 mm²; green-yellow, gray	www.wago.com/769-113/000-037
	Item no.: 769-113/000-038 1-conductor female plug; 4 mm²; 13-pole; 4,00 mm²; gray, blue, green-yellow	www.wago.com/769-113/000-038
	Item no.: 769-113/000-039 1-conductor female plug; 4 mm²; 13-pole; 4,00 mm²; green-yellow, blue, gray	www.wago.com/769-113/000-039
	Item no.: 769-113/022-000 1-conductor female plug; angled; 4 mm²; 13-pole; 4,00 mm²; gray	www.wago.com/769-113/022-000
	Item no.: 769-114 1-conductor female plug; 4 mm²; 14-pole; 4,00 mm²; gray	www.wago.com/769-114
	Item no.: 769-114/000-006 1-conductor female plug; 4 mm²; 14-pole; 4,00 mm²; blue	www.wago.com/769-114/000-006
	Item no.: 769-114/000-036 1-conductor female plug; 4 mm²; 14-pole; 4,00 mm²; gray, green-yellow	www.wago.com/769-114/000-036

Subject to changes. Please also observe the further product documentation!

WAGO Kontakttechnik GmbH & Co. KG
Hansastr. 27
32423 Minden
Phone: +49571 887-0 | Fax: +49571 887-169
Email: info.de@wago.com | Web: www.wago.com

Do you have any questions about our products?
We are always happy to take your call at +49 (571) 887-44222.

	Item no.: 769-114/000-037 1-conductor female plug; 4 mm²; 14-pole; 4,00 mm²; green-yellow, gray	www.wago.com/769-114/000-037
	Item no.: 769-114/000-038 1-conductor female plug; 4 mm²; 14-pole; 4,00 mm²; gray, blue, green-yellow	www.wago.com/769-114/000-038
	Item no.: 769-114/000-039 1-conductor female plug; 4 mm²; 14-pole; 4,00 mm²; green-yellow, blue, gray	www.wago.com/769-114/000-039
	Item no.: 769-114/022-000 1-conductor female plug; angled; 4 mm²; 14-pole; 4,00 mm²; gray	www.wago.com/769-114/022-000
	Item no.: 769-115 1-conductor female plug; 4 mm²; 15-pole; 4,00 mm²; gray	www.wago.com/769-115
	Item no.: 769-115/000-036 1-conductor female plug; 4 mm²; 15-pole; 4,00 mm²; gray, green-yellow	www.wago.com/769-115/000-036
	Item no.: 769-115/000-037 1-conductor female plug; 4 mm²; 15-pole; 4,00 mm²; green-yellow, gray	www.wago.com/769-115/000-037
	Item no.: 769-115/000-038 1-conductor female plug; 4 mm²; 15-pole; 4,00 mm²; gray, blue, green-yellow	www.wago.com/769-115/000-038
	Item no.: 769-115/000-039 1-conductor female plug; 4 mm²; 15-pole; 4,00 mm²; green-yellow, blue, gray	www.wago.com/769-115/000-039
	Item no.: 769-115/022-000 1-conductor female plug; angled; 4 mm²; 15-pole; 4,00 mm²; gray	www.wago.com/769-115/022-000
	Item no.: 769-121 2-conductor female connector; 4 mm²; 1-pole; 4,00 mm²; gray	www.wago.com/769-121
	Item no.: 769-121/000-016 2-conductor female connector; 4 mm²; 1-pole; 4,00 mm²; green-yellow	www.wago.com/769-121/000-016
	Item no.: 769-122 2-conductor female connector; 4 mm²; 2-pole; 4,00 mm²; gray	www.wago.com/769-122
	Item no.: 769-123 2-conductor female connector; 4 mm²; 3-pole; 4,00 mm²; gray	www.wago.com/769-123
	Item no.: 769-124 2-conductor female connector; 4 mm²; 4-pole; 4,00 mm²; gray	www.wago.com/769-124

Subject to changes. Please also observe the further product documentation!

WAGO Kontakttechnik GmbH & Co. KG
Hansastr. 27
32423 Minden
Phone: +49571 887-0 | Fax: +49571 887-169
Email: info.de@wago.com | Web: www.wago.com

Do you have any questions about our products?
We are always happy to take your call at +49 (571) 887-44222.

	Item no.: 769-125 2-conductor female connector; 4 mm²; 5-pole; 4,00 mm²; gray	www.wago.com/769-125
	Item no.: 769-126 2-conductor female connector; 4 mm²; 6-pole; 4,00 mm²; gray	www.wago.com/769-126
	Item no.: 769-127 2-conductor female connector; 4 mm²; 7-pole; 4,00 mm²; gray	www.wago.com/769-127
	Item no.: 769-128 2-conductor female connector; 4 mm²; 8-pole; 4,00 mm²; gray	www.wago.com/769-128
	Item no.: 769-129 2-conductor female connector; 4 mm²; 9-pole; 4,00 mm²; gray	www.wago.com/769-129
	Item no.: 769-130 2-conductor female connector; 4 mm²; 10-pole; 4,00 mm²; gray	www.wago.com/769-130
	Item no.: 769-131 2-conductor female connector; 4 mm²; 11-pole; 4,00 mm²; gray	www.wago.com/769-131
	Item no.: 769-132 2-conductor female connector; 4 mm²; 12-pole; 4,00 mm²; gray	www.wago.com/769-132
	Item no.: 769-133 2-conductor female connector; 4 mm²; 13-pole; 4,00 mm²; gray	www.wago.com/769-133
	Item no.: 769-134 2-conductor female connector; 4 mm²; 14-pole; 4,00 mm²; gray	www.wago.com/769-134
	Item no.: 769-135 2-conductor female connector; 4 mm²; 15-pole; 4,00 mm²; gray	www.wago.com/769-135
Coding		
	Item no.: 769-435 Coding pin; for coding of female plugs; for carrier terminal blocks / male connectors; orange	www.wago.com/769-435
Marking accessories		
	Item no.: 2009-145 Mini-WSB Inline; for Smart Printer; 1700 pieces on roll; stretchable 5 - 5.2 mm; plain; snap-on type; white	www.wago.com/2009-145
	Item no.: 2009-145/000-002 Mini-WSB Inline; for Smart Printer; 1700 pieces on roll; stretchable 5 - 5.2 mm; plain; snap-on type; white	www.wago.com/2009-145/000-002
	Item no.: 2009-145/000-005 Mini-WSB Inline; for Smart Printer; 1700 pieces on roll; stretchable 5 - 5.2 mm; plain; snap-on type; red	www.wago.com/2009-145/000-005
	Item no.: 2009-145/000-006 Mini-WSB Inline; for Smart Printer; 1700 pieces on roll; stretchable 5 - 5.2 mm; plain; snap-on type; blue	www.wago.com/2009-145/000-006

Subject to changes. Please also observe the further product documentation!

WAGO Kontakttechnik GmbH & Co. KG
Hansastr. 27
32423 Minden
Phone: +49571 887-0 | Fax: +49571 887-169
Email: info.de@wago.com | Web: www.wago.com

Do you have any questions about our products?
We are always happy to take your call at +49 (571) 887-44222.

	Item no.: 2009-145/000-007 Mini-WSB Inline; for Smart Printer; 1700 pieces on roll; stretchable 5 - 5.2 mm; plain; snap-on type; white	www.wago.com/2009-145/000-007
	Item no.: 2009-145/000-012 Mini-WSB Inline; for Smart Printer; 1700 pieces on roll; stretchable 5 - 5.2 mm; plain; snap-on type; orange	www.wago.com/2009-145/000-012
	Item no.: 2009-145/000-023 Mini-WSB Inline; for Smart Printer; 1700 pieces on roll; stretchable 5 - 5.2 mm; plain; snap-on type; green	www.wago.com/2009-145/000-023
	Item no.: 2009-145/000-024 Mini-WSB Inline; for Smart Printer; 1700 pieces on roll; stretchable 5 - 5.2 mm; plain; snap-on type; violet	www.wago.com/2009-145/000-024
	Item no.: 248-501 Miniature WSB Quick marking system; plain; Marker width 5 mm; 10 strips with 10 markers per card	www.wago.com/248-501
	Item no.: 248-501/000-002 Mini-WSB marking card; as card; not stretchable; plain; snap-on type; yellow	www.wago.com/248-501/000-002
	Item no.: 248-501/000-005 Mini-WSB marking card; as card; not stretchable; plain; snap-on type; red	www.wago.com/248-501/000-005
	Item no.: 248-501/000-006 Mini-WSB marking card; as card; not stretchable; plain; snap-on type; blue	www.wago.com/248-501/000-006
	Item no.: 248-501/000-007 Mini-WSB marking card; as card; not stretchable; plain; snap-on type; gray	www.wago.com/248-501/000-007
	Item no.: 248-501/000-012 Mini-WSB marking card; as card; not stretchable; plain; snap-on type; orange	www.wago.com/248-501/000-012
	Item no.: 248-501/000-017 Mini-WSB marking card; as card; not stretchable; plain; snap-on type; light green	www.wago.com/248-501/000-017
	Item no.: 248-501/000-023 Mini-WSB marking card; as card; not stretchable; plain; snap-on type; green	www.wago.com/248-501/000-023
	Item no.: 248-501/000-024 Mini-WSB marking card; as card; not stretchable; plain; snap-on type; violet	www.wago.com/248-501/000-024

assembling

	Item no.: 209-106 Mounting carrier; for isolated mounting on DIN 35 rails; gray	www.wago.com/209-106

Subject to changes. Please also observe the further product documentation!

WAGO Kontakttechnik GmbH & Co. KG
Hansastr. 27
32423 Minden
Phone: +49571 887-0 | Fax: +49571 887-169
Email: info.de@wago.com | Web: www.wago.com

Do you have any questions about our products?
We are always happy to take your call at +49 (571) 887-44222.

Downloads

Documentation

Additional Information

Technical explanations	Apr 3, 2019	pdf 2.1 MB	Download

CAD/CAE-Data

CAD data

2D/3D Models 769-239/281-413	URL	Download

CAE data

EPLAN Data Portal 769-239/281-413	URL	Download
WSCAD Universe 769-239/281-413	URL	Download

Installation Notes

Assembly

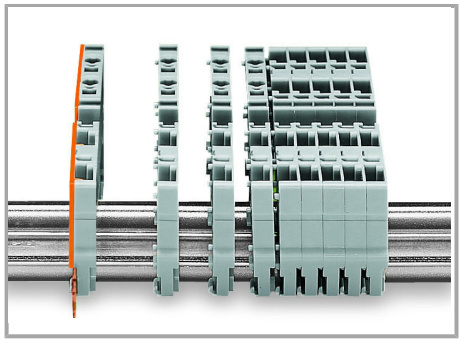

Snap individual carrier terminal blocks onto the carrier rail and slide together.

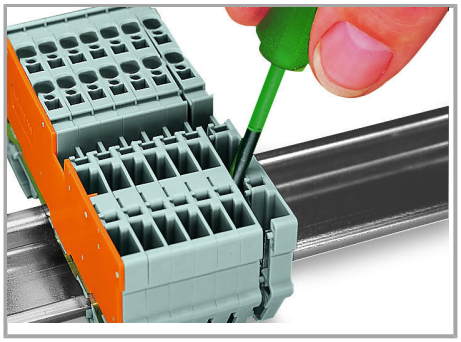

Open the assembly by laterally sliding a block via operating tool and remove terminal block via release lever.

Inserting a conductor

Subject to changes. Please also observe the further product documentation!

WAGO Kontakttechnik GmbH & Co. KG
Hansastr. 27
32423 Minden
Phone: +49571 887-0 | Fax: +49571 887-169
Email: info.de@wago.com | Web: www.wago.com

Do you have any questions about our products?
We are always happy to take your call at +49 (571) 887-44222.

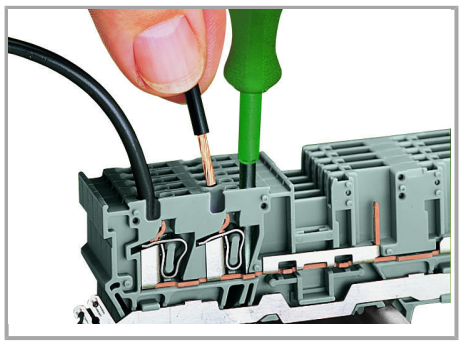

CAGE CLAMP® connection

Carrier terminal block: Insert/remove conductor via operating tool (3.5 x 0.5 mm blade).

Jumpered

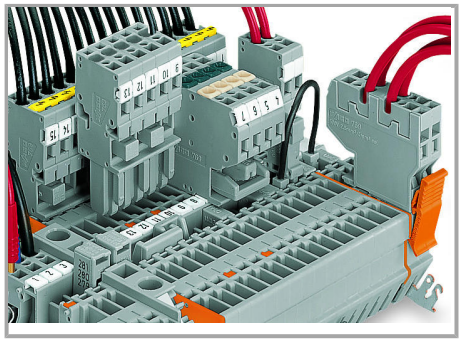

Commoning with adjacent or staggered jumpers –

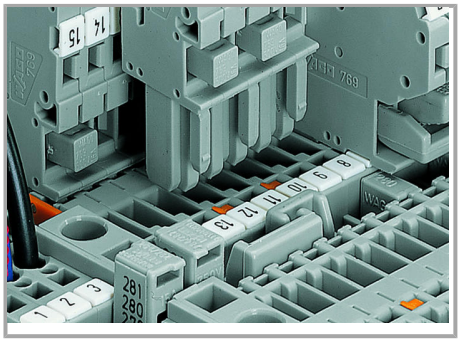

Commoning carrier terminal blocks via staggered jumpers.

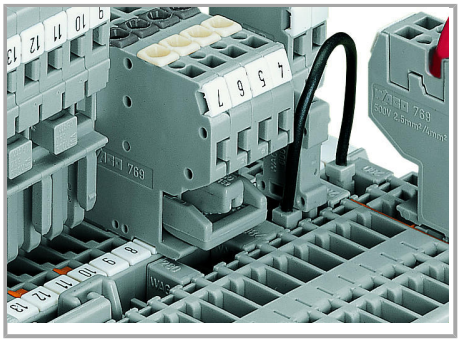

Commoning a 2-conductor female plug via staggered jumper and carrier terminal blocks via adjacent jumpers.

push jumpers down until fully inserted.

Subject to changes. Please also observe the further product documentation!

WAGO Kontakttechnik GmbH & Co. KG
Hansastr. 27
32423 Minden
Phone: +49571 887-0 | Fax: +49571 887-169
Email: info.de@wago.com | Web: www.wago.com

Do you have any questions about our products?
We are always happy to take your call at +49 (571) 887-44222.

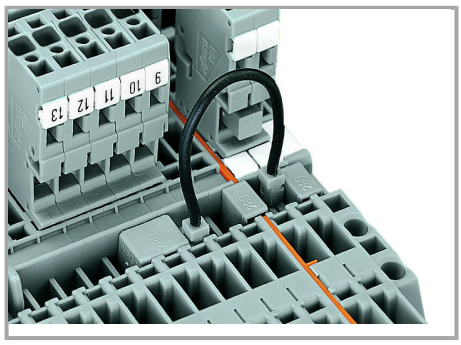

Commoning carrier terminal blocks via push-in type wire jumpers or adjacent jumpers – even over an intermediate plate.

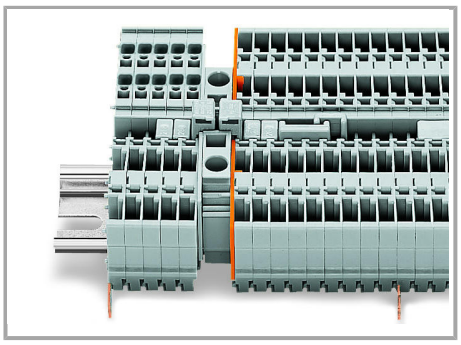

Commoning “supply terminal blocks” (up to 10 mm²/8 AWG) with carrier terminal blocks via step-down jumpers.

Testing

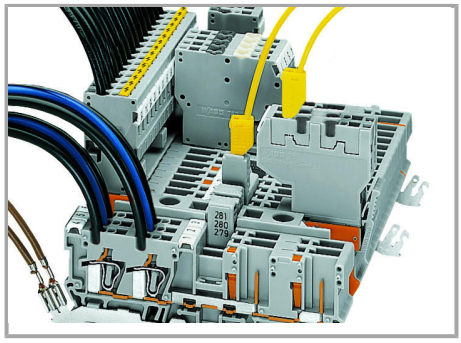

Testing via 2 or 2.3 mm Ø test plugs.

Coding

WAGO Kontakttechnik GmbH & Co. KG
Hansastr. 27
32423 Minden
Phone: +49571 887-0 | Fax: +49571 887-169
Email: info.de@wago.com | Web: www.wago.com

Do you have any questions about our products?
We are always happy to take your call at +49 (571) 887-44222.

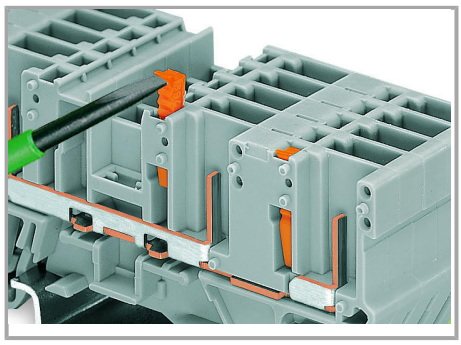

Snap coding pin in proper direction on carrier terminal block.

Shown: Coding pin removal from carrier terminal block.

Locking

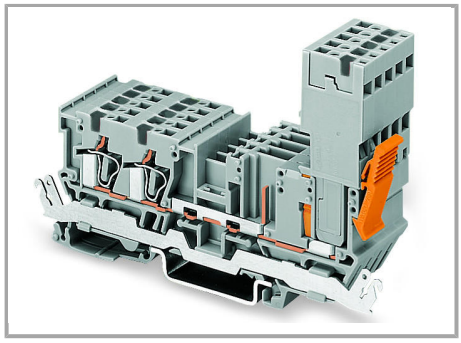

Female plug secured with locking lever on the terminal block side.

Product family

X-COM
Learn more about the product family.

Show all products from the family

Subject to changes. Please also observe the further product documentation!

WAGO Kontakttechnik GmbH & Co. KG
Hansastr. 27
32423 Minden
Phone: +49571 887-0 | Fax: +49571 887-169
Email: info.de@wago.com | Web: www.wago.com

Do you have any questions about our products?
We are always happy to take your call at +49 (571) 887-44222.