Data sheet | Item number: 734-570

THT female header; 0.9 x 0.9 mm solder pin; angled; 100% protected against mismating; Pin spacing 3.81 mm; 10-pole; orange

www.wago.com/734-570

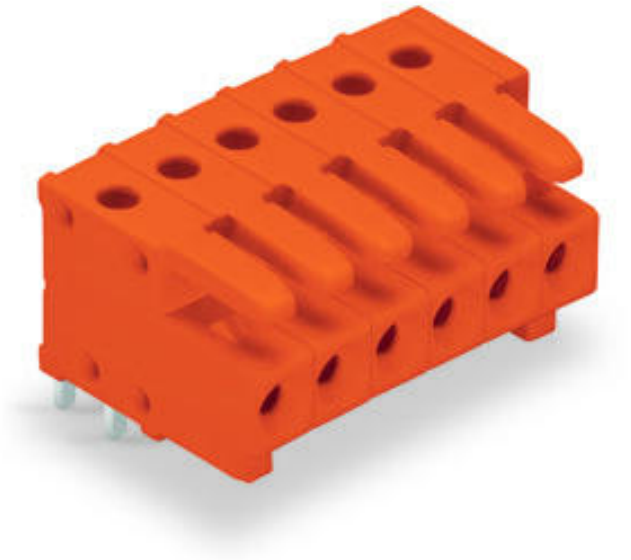

RoHS ✓ Compliant

BOMcheck.net

Color:

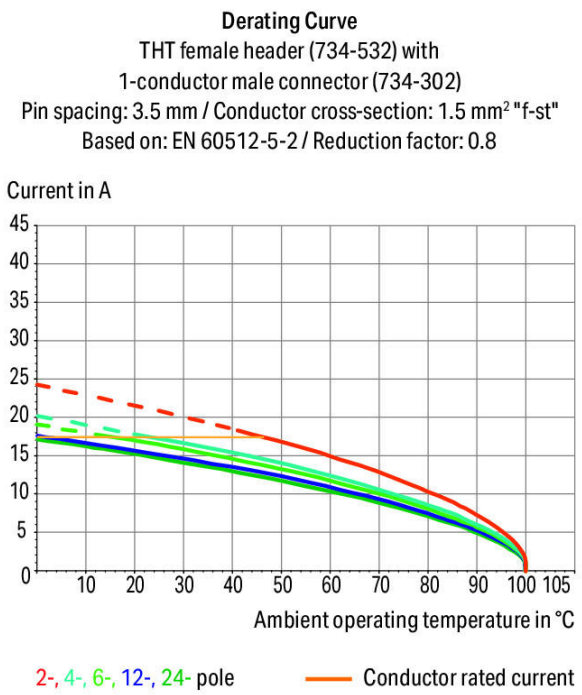

Subject to changes. Please also observe the further product documentation!

WAGO Kontakttechnik GmbH & Co. KG
Hansastr. 27
32423 Minden
Phone: +49571 887-0 | Fax: +49571 887-169
Email: info.de@wago.com | Web: www.wago.com

Do you have any questions about our products?
We are always happy to take your call at +49 (571) 887-44222.

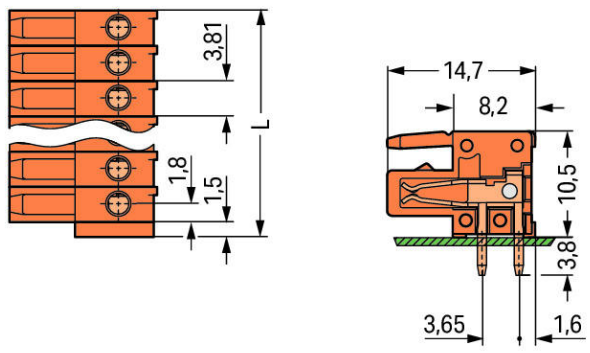

L = (pole no. x pin spacing) + 1.5 mm

Item description

- Horizontal or vertical PCB mounting via straight or angled solder pins
- Integrated test ports for 2 mm Ø test plugs
- For board-to-board and board-to-wire connections
- Touch-proof PCB outputs
- Easy-to-identify inputs and outputs
- 100% protected against mismating
- Coding via coding fingers

Safety information 1:
The *MULTI CONNECTION SYSTEM (MCS)* is designed without breaking capacity for compliance with DIN EN 61984. When used as intended, MCS Connectors shall not be connected/disconnected when live or under load. The circuit design should ensure header pins, which can be touched, are not live when unmated.

Data
Electrical data

Ratings per IEC/EN 60664-1

Ratings per	IEC/EN 60664-1
Rated voltage (III / 3)	160 V
Rated impulse voltage (III / 3)	2.5 kV
Rated voltage (III / 2)	160 V

Subject to changes. Please also observe the further product documentation!

WAGO Kontakttechnik GmbH & Co. KG
Hansastr. 27
32423 Minden
Phone: +49571 887-0 | Fax: +49571 887-169
Email: info.de@wago.com | Web: www.wago.com

Do you have any questions about our products?
We are always happy to take your call at +49 (571) 887-44222.

Rated impulse voltage (III / 2)	2.5 kV
Rated voltage (II / 2)	320 V
Rated impulse voltage (II / 2)	2.5 kV
Rated current	10 A
Legend (ratings)	(III / 2) ≙ Overvoltage category III / Pollution degree 2

Approvals per UL 1059

Rated voltage UL (Use Group B)	300 V
Rated current UL (Use Group B)	10 A
Rated voltage UL (Use Group D)	300 V
Rated current UL (Use Group D)	10 A
Approvals per	UL 1059

Approvals per CSA

Rated voltage CSA (Use Group B)	300 V
Rated current CSA (Use Group B)	10 A
Rated voltage CSA (Use Group D)	300 V
Rated current CSA (Use Group D)	10 A

Connection data

No. of poles	10
Total number of connection points	10
Total number of potentials	10
Number of connection types	1
Number of levels	1

Geometrical Data

Pin spacing	3.81 mm / 0.15 inch
Width	39.6 mm / 1.559 inch
Height	14.3 mm / 0.563 inch
Height from the surface	10.5 mm / 0.413 inch
Depth	14.65 mm / 0.577 inch
Solder pin length	3.8 mm
Solder pin dimensions	0.9 x 0.9 mm
Drilled hole diameter (tolerance)	$1.4^{(+0.1)}$ mm

Subject to changes. Please also observe the further product documentation!

WAGO Kontakttechnik GmbH & Co. KG
Hansastr. 27
32423 Minden
Phone: +49571 887-0 | Fax: +49571 887-169
Email: info.de@wago.com | Web: www.wago.com

Do you have any questions about our products?
We are always happy to take your call at +49 (571) 887-44222.

Plug connection

Contact type (pluggable connector)	Female connector/socket
Connector connection type	for PCBs
Mismating protection	Yes
Mating direction to the PCB	0 °

PCB contact

PCB contact	THT
Solder pin arrangement	over the entire female connector, in line
Number of solder pins per potential	1

Material Data

Color	orange
Material group	I
Insulating material	Polyamide 66 (PA 66)
Flammability class per UL94	V0
Contact material	Copper alloy
Contact plating	tin-plated
Fire load	0.113 MJ
Weight	6.1 g

Environmental Requirements

Limit temperature range	-60 … +100 °C

Commercial data

Product Group	3 (Multi Conn. System)
Packaging type	BOX
Country of origin	DE
GTIN	4045454120962
Customs Tariff No.	85366990990

Approvals / Certificates

Country specific Approvals

Logo	Approval	Additional Approval Text	Certificate name
	CB	EN 61984	NL-54190

Subject to changes. Please also observe the further product documentation!

WAGO Kontakttechnik GmbH & Co. KG
Hansastr. 27
32423 Minden
Phone: +49571 887-0 | Fax: +49571 887-169
Email: info.de@wago.com | Web: www.wago.com

Do you have any questions about our products?
We are always happy to take your call at +49 (571) 887-44222.

	DEKRA Certification B.V.		
	CSA DEKRA Certification B.V.	C22.2	1465035
	KEMA/KEUR DEKRA Certification B.V.	EN 61984	71-105522

Ship Approvals

Logo	Approval	Additional Approval Text	Certificate name
	DNV GL Det Norske Veritas, Germanischer Lloyd	-	TAE000016Z
	LR Lloyds Register	IEC 61984	96/20035 (E5)

UL-Approvals

Logo	Approval	Additional Approval Text	Certificate name
	UL UL International Germany GmbH	UL 1977	20150318-E45171
	UR Underwriters Laboratories Inc.	UL 1059	20190122-E45172

Counterpart

	Item no.734-340 1-conductor male connector; 100% protected against mismating; 1.5 mm²; Pin spacing 3.81 mm; 10-pole; 1,50 mm²; orange	www.wago.com/734-340
	Item no.734-340/019-000 1-conductor male connector; 100% protected against mismating; clamping collar; 1.5 mm²; Pin spacing 3.81 mm; 10-pole; 1,50 mm²; orange	www.wago.com/734-340/019-000

Subject to changes. Please also observe the further product documentation!

WAGO Kontakttechnik GmbH & Co. KG
Hansastr. 27
32423 Minden
Phone: +49571 887-0 | Fax: +49571 887-169
Email: info.de@wago.com | Web: www.wago.com

Do you have any questions about our products?
We are always happy to take your call at +49 (571) 887-44222.

Item no.734-340/034-000
1-conductor male connector; 100% protected against mismating; Strain relief plate; 1.5 mm²; Pin spacing 3.81 mm; 10-pole; 1,50 mm²; orange

www.wago.com/734-340/034-000

Downloads

Documentation

Additional Information

Technical explanations	Apr 3, 2019	pdf 3.6 MB	Download

CAD/CAE-Data

CAD data

2D/3D Models 734-570	URL	Download

CAE data

EPLAN Data Portal 734-570	URL	Download

PCB Design

Symbol and Footprint 734-570	URL	Download

CAx data for your PCB design, consisting of "schematic symbols and PCB footprints", allow easy integration of the WAGO component into your development environment.

Supported formats:

- Accel EDA 14 & 15
- Altium 6 to current version
- Cadence Allegro
- DesignSpark
- Eagle Libraries
- KiCad
- Mentor Graphics BoardStation
- Mentor Graphics Design Architect
- Mentor Graphics Design Expedition 99 and 2000
- OrCAD 9.X PCB and Capture
- PADS PowerPCB 3, 3.5, 4.X, and 5.X
- PADS PowerPCB and PowerLogic 3.0

Subject to changes. Please also observe the further product documentation!

WAGO Kontakttechnik GmbH & Co. KG
Hansastr. 27
32423 Minden
Phone: +49571 887-0 | Fax: +49571 887-169
Email: info.de@wago.com | Web: www.wago.com

Do you have any questions about our products?
We are always happy to take your call at +49 (571) 887-44222.

- PCAD 2000, 2001, 2002, 2004, and 2006
- Pulsonix 8.5 or newer
- STL
- 3D STEP
- TARGET 3001!
- View Logic ViewDraw
- Quadcept
- Zuken CadStar 3 and 4
- Zuken CR-5000 and CR-8000

PCB Component Libraries (EDA), PCB CAD Library Ultra Librarian

Installation Notes

Product family

MCS MINI
Learn more about the product family.

Show all products from the family

WAGO Kontakttechnik GmbH & Co. KG
Hansastr. 27
32423 Minden
Phone: +49571 887-0 | Fax: +49571 887-169
Email: info.de@wago.com | Web: www.wago.com

Do you have any questions about our products?
We are always happy to take your call at +49 (571) 887-44222.