Data sheet | Item number: 722-232/005-000

Female connector for rail-mount terminal blocks; 0.6 x 1 mm pins; angled; 100% protected against mismating; Pin spacing 5 mm; 2-pole; light gray

www.wago.com/722-232/005-000

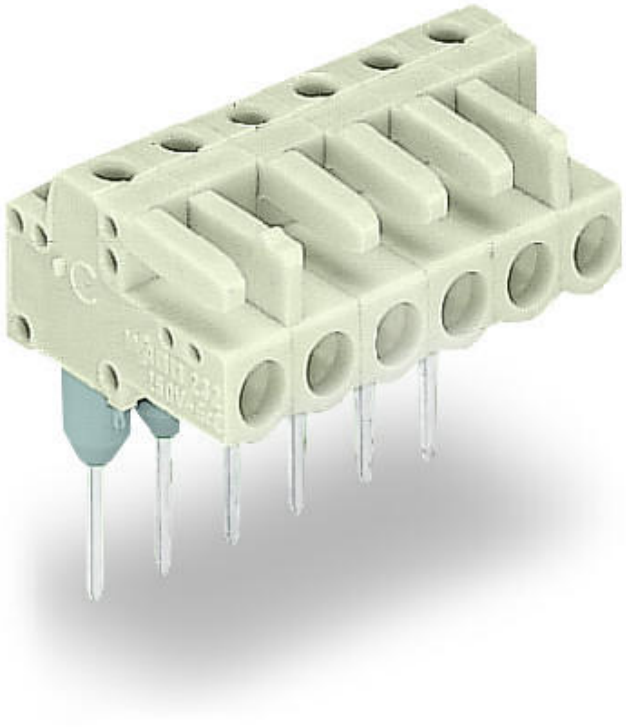

RoHS Compliant ✓

BOMcheck.net

Color:

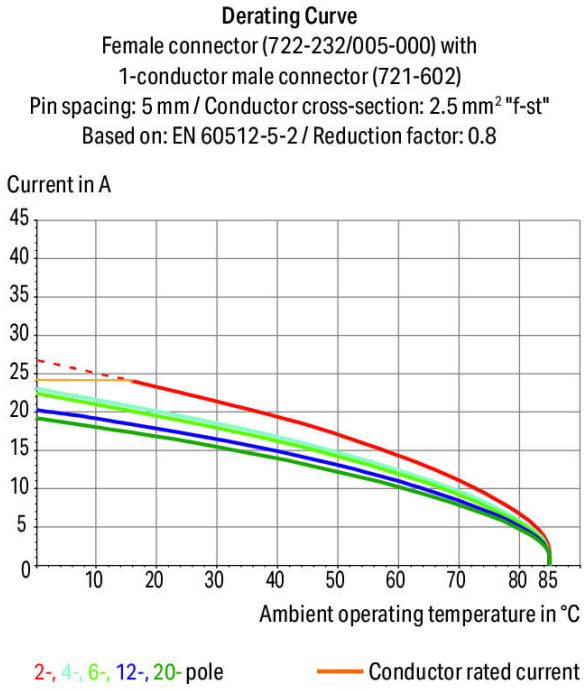

Subject to changes. Please also observe the further product documentation!

WAGO Kontakttechnik GmbH & Co. KG
Hansastr. 27
32423 Minden
Phone: +49571 887-0 | Fax: +49571 887-169
Email: info.de@wago.com | Web: www.wago.com

Do you have any questions about our products?
We are always happy to take your call at +49 (571) 887-44222.

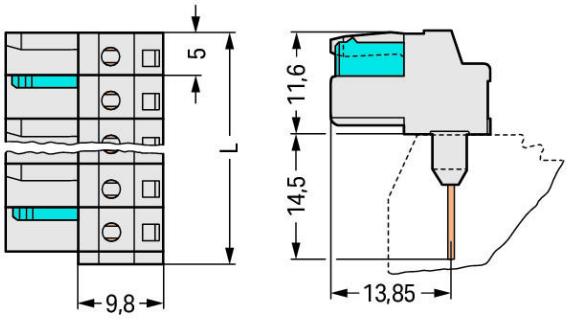

L = (pole no. x pin spacing) + 1.5 mm

2-pole female connectors – one latch only

Item description

- Pluggable connectors for rail-mount terminal blocks equipped with CAGE CLAMP® connection
- Female connectors with long contact pins connect to the termination ports of 280 Series Rail-Mount Terminal Blocks
- Female connectors are touch-proof when unmated, providing a pluggable, live output
- 100 % protected against mismating
- With coding fingers

Safety information 1:
The *MCS – MULTI CONNECTION SYSTEM* includes connectors without breaking capacity in accordance with DIN EN 61984. When used as intended, these connectors must not be connected/disconnected when live or under load. The circuit design should ensure header pins, which can be touched, are not live when unmated.

Data
Electrical data

Ratings per IEC/EN 60664-1

Ratings per	IEC/EN 60664-1
Rated voltage (III / 3)	320 V
Rated impulse voltage (III / 3)	4 kV
Rated voltage (III / 2)	320 V

Subject to changes. Please also observe the further product documentation!

WAGO Kontakttechnik GmbH & Co. KG
Hansastr. 27
32423 Minden
Phone: +49571 887-0 | Fax: +49571 887-169
Email: info.de@wago.com | Web: www.wago.com

Do you have any questions about our products?
We are always happy to take your call at +49 (571) 887-44222.

Rated impulse voltage (III / 2)	4 kV
Rated voltage (II / 2)	630 V
Rated impulse voltage (II / 2)	4 kV
Rated current	12 A
Legend (ratings)	(III / 2) ≙ Overvoltage category III / Pollution degree 2

Approvals per UL 1059

Rated voltage UL (Use Group B)	300 V
Rated current UL (Use Group B)	15 A
Rated voltage UL (Use Group D)	300 V
Rated current UL (Use Group D)	10 A
Approvals per	UL 1059

Approvals per UL 1977

Rated voltage per UL 1977 (factory wiring only)	600 V
Rated current per UL 1977 (factory wiring only)	15 A

Approvals per CSA

Rated voltage CSA (Use Group B)	300 V
Rated current CSA (Use Group B)	15 A
Rated voltage CSA (Use Group D)	300 V
Rated current CSA (Use Group D)	10 A

Connection data

No. of poles	2
Total number of potentials	2
Number of connection types	1
Number of levels	1

Geometrical Data

Pin spacing	5 mm / 0.197 inch
Width	11,5 mm / 0.453 inch
Height	26,1 mm / 1.028 inch
Height from the surface	11,6 mm / 0.457 inch
Depth	18,25 mm / 0.719 inch

Subject to changes. Please also observe the further product documentation!

WAGO Kontakttechnik GmbH & Co. KG
Hansastr. 27
32423 Minden
Phone: +49571 887-0 | Fax: +49571 887-169
Email: info.de@wago.com | Web: www.wago.com

Do you have any questions about our products?
We are always happy to take your call at +49 (571) 887-44222.

Plug connection

Contact type (pluggable connector)	Female connector/socket
Connector connection type	for front-entry rail-mount terminal block
Mismating protection	Yes
Steckrichtung zur Reihenklemme	0 °

Material Data

Color	light gray
Material group	I
Insulating material	Polyamide 66 (PA 66)
Flammability class per UL94	V0
Contact material	Copper alloy
Contact plating	tin-plated
Fire load	0.04 MJ
Weight	2.2 g

Environmental Requirements

Limit temperature range	-60 … +85 °C

Commercial data

Product Group	3 (Multi Conn. System)
Packaging type	BOX
Country of origin	DE
GTIN	4044918572415
Customs Tariff No.	85366990990

Approvals / Certificates

Country specific Approvals

Logo	Approval	Additional Approval Text	Certificate name
	CB DEKRA Certification B.V.	IEC 61984	NL-39756
	CSA DEKRA Certification B.V.	C22.2	1466354
	KEMA/KEUR	EN 61984	2190761.01

Subject to changes. Please also observe the further product documentation!

WAGO Kontakttechnik GmbH & Co. KG
Hansastr. 27
32423 Minden
Phone: +49571 887-0 | Fax: +49571 887-169
Email: info.de@wago.com | Web: www.wago.com

Do you have any questions about our products?
We are always happy to take your call at +49 (571) 887-44222.

DEKRA Certification B.V.

Ship Approvals

Logo	Approval	Additional Approval Text	Certificate name
	ABS American Bureau of Shipping	-	19-HG1869876-PDA

UL-Approvals

Logo	Approval	Additional Approval Text	Certificate name
	UL Underwriters Laboratories Inc.	UL 1059	E45172-19911118
	UR UL International Germany GmbH	UL 1977	E45171

Counterpart

Item no.721-602
1-conductor male connector; 100% protected against mismating; 2.5 mm²; Pin spacing 5 mm; 2-pole; 2,50 mm²; light gray

www.wago.com/721-602

Compatible products

Test Accessories

Item no.: 210-136
Test plug; 2 mm Ø; with 500 mm cable; red

www.wago.com/210-136

Item no.: 210-137
Test plug; 2.3 mm Ø; with 500 mm cable; yellow

www.wago.com/210-137

Item no.: 231-661
Test plugs for female connectors; for 5 mm and 5.08 mm pin spacing; 2,50 mm²; light gray

www.wago.com/231-661

Subject to changes. Please also observe the further product documentation!

WAGO Kontakttechnik GmbH & Co. KG
Hansastr. 27
32423 Minden
Phone: +49571 887-0 | Fax: +49571 887-169
Email: info.de@wago.com | Web: www.wago.com

Do you have any questions about our products?
We are always happy to take your call at +49 (571) 887-44222.

tools		
	Item no.: 280-432 Operating tool; made of insulating material; 2-way	www.wago.com/280-432
General accessories		
	Item no.: 280-650/056-000 Spacer of same profile; suitable for 3-conductor terminal blocks of horizontal type; orange	www.wago.com/280-650/056-000
	Item no.: 280-654/056-000 Spacer of same profile; suitable for 3- and 4-conductor terminal blocks of angled type; orange	www.wago.com/280-654/056-000
	Item no.: 280-835/056-000 Spacer of same profile; suitable for 4-conductor terminal blocks of horizontal type; orange	www.wago.com/280-835/056-000
	Item no.: 280-902/056-000 Spacer of same profile; suitable for 2-conductor terminal blocks of horizontal type; orange	www.wago.com/280-902/056-000

Downloads

Documentation

Additional Information

Technical explanations	Apr 3, 2019	pdf 3.6 MB	Download

CAD/CAE-Data

CAD data

2D/3D Models 722-232/005-000	URL	Download

CAE data

EPLAN Data Portal 722-232/005-000	URL	Download

Installation Notes

WAGO Kontakttechnik GmbH & Co. KG
Hansastr. 27
32423 Minden
Phone: +49571 887-0 | Fax: +49571 887-169
Email: info.de@wago.com | Web: www.wago.com

Do you have any questions about our products?
We are always happy to take your call at +49 (571) 887-44222.

Product family

MCS MIDI
Learn more about the product family.

Show all products from the family

Subject to changes. Please also observe the further product documentation!

WAGO Kontakttechnik GmbH & Co. KG
Hansastr. 27
32423 Minden
Phone: +49571 887-0 | Fax: +49571 887-169
Email: info.de@wago.com | Web: www.wago.com

Do you have any questions about our products?
We are always happy to take your call at +49 (571) 887-44222.