THT male header; 1.2 x 1.2 mm solder pin; angled; 100% protected against mismating; Pin spacing 5 mm; 12-pole; light gray

www.wago.com/721-472/001-000

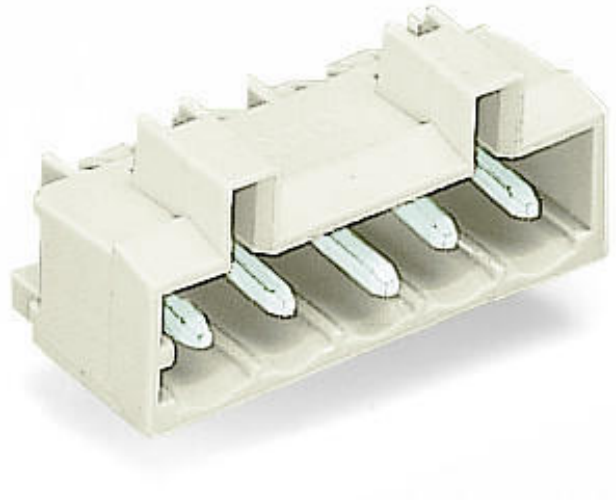

RoHS ✓ Compliant

BOMcheck.net

Color:

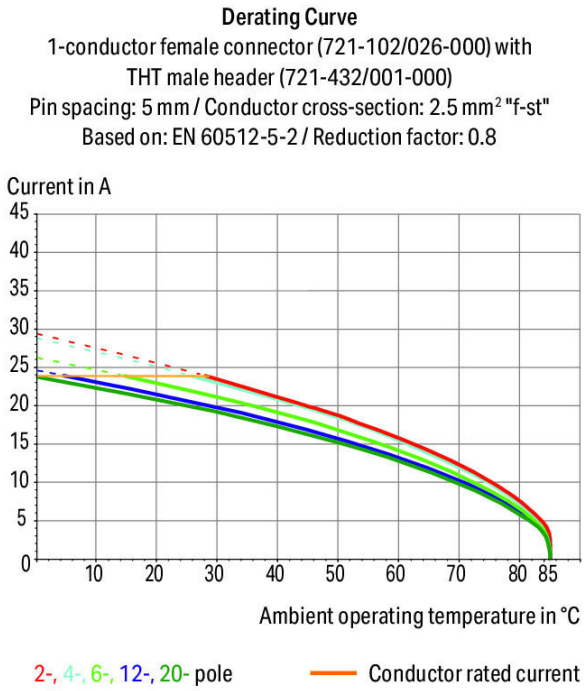

Subject to changes. Please also observe the further product documentation!

WAGO Kontakttechnik GmbH & Co. KG
Hansastr. 27
32423 Minden
Phone: +49571 887-0 | Fax: +49571 887-169
Email: info.de@wago.com | Web: www.wago.com

Do you have any questions about our products?
We are always happy to take your call at +49 (571) 887-44222.

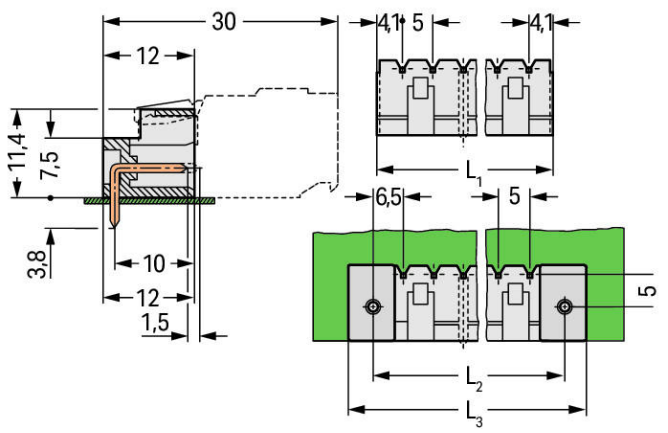

L_1 = (pole no. – 1) x pin spacing + 8.2 mm

L_2 = L_1 + 5 mm

L_3 = L_2 + 7.4 mm

Item description

- Horizontal or vertical PCB mounting via straight or angled solder pins
- 1.2 x 1.2 mm solder pins allow nominal current up to 16 A, enhancing stability of horter headers
- 100 % protected against mismating
- With coding fingers

Safety information 1:
The *MULTI CONNECTION SYSTEM (MCS)* is designed without breaking capacity for compliance with DIN EN 61984. When used as intended, MCS Connectors shall not be connected/disconnected when live or under load. The circuit design should ensure header pins, which can be touched, are not live when unmated.

Data
Electrical data

Ratings per IEC/EN 60664-1

Ratings per	IEC/EN 60664-1

Subject to changes. Please also observe the further product documentation!

WAGO Kontakttechnik GmbH & Co. KG
Hansastr. 27
32423 Minden
Phone: +49571 887-0 | Fax: +49571 887-169
Email: info.de@wago.com | Web: www.wago.com

Do you have any questions about our products?
We are always happy to take your call at +49 (571) 887-44222.

Rated voltage (III / 3)	250 V
Rated impulse voltage (III / 3)	4 kV
Rated voltage (III / 2)	320 V
Rated impulse voltage (III / 2)	4 kV
Rated voltage (II / 2)	630 V
Rated impulse voltage (II / 2)	4 kV
Rated current	16 A
Legend (ratings)	(III / 2) ≙ Overvoltage category III / Pollution degree 2

Approvals per UL 1059

Rated voltage UL (Use Group B)	300 V
Rated current UL (Use Group B)	15 A
Rated voltage UL (Use Group D)	300 V
Rated current UL (Use Group D)	10 A
Approvals per	UL 1059

Approvals per UL 1977

Rated voltage per UL 1977 (factory wiring only)	600 V
Rated current per UL 1977 (factory wiring only)	15 A

Approvals per CSA

Rated voltage CSA (Use Group B)	300 V
Rated current CSA (Use Group B)	15 A
Rated voltage CSA (Use Group D)	300 V
Rated current CSA (Use Group D)	10 A

Connection data

No. of poles	12
Total number of potentials	12
Number of connection types	1
Number of levels	1

Geometrical Data

Pin spacing	5 mm / 0.197 inch
Width	63.2 mm / 2.488 inch
Height	15.2 mm / 0.598 inch

Subject to changes. Please also observe the further product documentation!

WAGO Kontakttechnik GmbH & Co. KG
Hansastr. 27
32423 Minden
Phone: +49571 887-0 | Fax: +49571 887-169
Email: info.de@wago.com | Web: www.wago.com

Do you have any questions about our products?
We are always happy to take your call at +49 (571) 887-44222.

Height from the surface	11.4 mm / 0.449 inch
Depth	12 mm / 0.472 inch
Solder pin length	3.8 mm
Solder pin dimensions	1.2 x 1.2 mm
Drilled hole diameter (tolerance)	1.7 $^{(+0.1)}$ mm

Plug connection

Contact type (pluggable connector)	Male connector/plug
Connector connection type	for PCBs
Mismating protection	Yes
Mating direction to the PCB	0 °

PCB contact

PCB contact	THT
Solder pin arrangement	over the entire male connector, in line
Number of solder pins per potential	1

Material Data

Color	light gray
Material group	I
Insulating material	Polyamide 66 (PA 66)
Flammability class per UL94	V0
Contact material	Electrolytic copper (E_{Cu})
Contact plating	tin-plated
Fire load	0.071 MJ
Weight	4.6 g

Environmental Requirements

Limit temperature range	-60 … +100 °C

Commercial data

Product Group	3 (Multi Conn. System)
Packaging type	BOX
Country of origin	PL
GTIN	4044918933322

Subject to changes. Please also observe the further product documentation!

WAGO Kontakttechnik GmbH & Co. KG
Hansastr. 27
32423 Minden
Phone: +49571 887-0 | Fax: +49571 887-169
Email: info.de@wago.com | Web: www.wago.com

Do you have any questions about our products?
We are always happy to take your call at +49 (571) 887-44222.

Customs Tariff No.	85366990990

Approvals / Certificates

Country specific Approvals

Logo	Approval	Additional Approval Text	Certificate name
	CB DEKRA Certification B.V.	IEC 61984	NL-39756
	KEMA/KEUR DEKRA Certification B.V.	EN 61984	2190761.01

Ship Approvals

Logo	Approval	Additional Approval Text	Certificate name
	ABS American Bureau of Shipping	-	19-HG1869876-PDA
	DNV GL Det Norske Veritas, Germanischer Lloyd	-	TAE000016Z

UL-Approvals

Logo	Approval	Additional Approval Text	Certificate name
	UL Underwriters Laboratories Inc.	UL 1059	20190731-E45172
	UR UL International Germany GmbH	UL 1977	E45171

Counterpart

Item no.721-112/026-000
1-conductor female plug; 100% protected against mismating; 2.5 mm²; Pin spacing 5 mm; 12-pole; 2,50 mm²; light gray

www.wago.com/721-112/026-000

Subject to changes. Please also observe the further product documentation!

WAGO Kontakttechnik GmbH & Co. KG
Hansastr. 27
32423 Minden
Phone: +49571 887-0 | Fax: +49571 887-169
Email: info.de@wago.com | Web: www.wago.com

Do you have any questions about our products?
We are always happy to take your call at +49 (571) 887-44222.

Compatible products

Marking accessories		
	Item no.: 210-833 Marking strips; on reel; 6 mm wide; plain; Self-adhesive; white	www.wago.com/210-833
	Item no.: 210-834 Marking strips; on reel; 5 mm wide; plain; Self-adhesive; white	www.wago.com/210-834
Coding		
	Item no.: 231-129 Coding key; snap-on type; light gray	www.wago.com/231-129
Female plug		
	Item no.: 2721-112/026-000 1-conductor female plug; 100% protected against mismating; push-button; 2.5 mm²; Pin spacing 5 mm; 12-pole; 2,50 mm²; light gray	www.wago.com/2721-112/026-000
	Item no.: 2721-112/037-000 1-conductor female plug; 100% protected against mismating; push-button; Locking lever; 2.5 mm²; Pin spacing 5 mm; 12-pole; 2,50 mm²; light gray	www.wago.com/2721-112/037-000
	Item no.: 721-112/037-000 1-conductor female plug; 100% protected against mismating; Locking lever; 2.5 mm²; Pin spacing 5 mm; 12-pole; 2,50 mm²; light gray	www.wago.com/721-112/037-000
	Item no.: 721-312/008-000 1-conductor female plug; angled; 100% protected against mismating; Snap-in mounting feet; 2.5 mm²; Pin spacing 5 mm; 12-pole; 2,50 mm²; light gray	www.wago.com/721-312/008-000
	Item no.: 721-312/031-000 1-conductor female plug; angled; 100% protected against mismating; clamping collar; 2.5 mm²; Pin spacing 5 mm; 12-pole; 2,50 mm²; light gray	www.wago.com/721-312/031-000
	Item no.: 722-142/031-000 THT female header; 0.6 x 1.0 mm solder pin; straight; 100% protected against mismating; clamping collar; Pin spacing 5 mm; 12-pole; light gray	www.wago.com/722-142/031-000
	Item no.: 722-142/039-000 THT female header; 0.6 x 1.0 mm solder pin; straight; 100% protected against mismating; Locking lever; Pin spacing 5 mm; 12-pole; light gray	www.wago.com/722-142/039-000
	Item no.: 722-142/047-000 THT female header; 0.6 x 1.0 mm solder pin; straight; 100% protected against mismating; Spacer flange; Pin spacing 5 mm; 12-pole; light gray	www.wago.com/722-142/047-000
	Item no.: 722-212/026-000 1-conductor female plug; angled; 100% protected against mismating; 2.5 mm²; Pin spacing 5 mm; 12-	

Subject to changes. Please also observe the further product documentation!

WAGO Kontakttechnik GmbH & Co. KG
Hansastr. 27
32423 Minden
Phone: +49571 887-0 | Fax: +49571 887-169
Email: info.de@wago.com | Web: www.wago.com

Do you have any questions about our products?
We are always happy to take your call at +49 (571) 887-44222.

	pole; 2,50 mm²; light gray	www.wago.com/722-212/026-000
	Item no.: 722-242 THT female header; 0.6 x 1.0 mm solder pin; angled; 100% protected against mismating; Pin spacing 5 mm; 12-pole; light gray	www.wago.com/722-242
	Item no.: 722-242/031-000 THT female header; 0.6 x 1.0 mm solder pin; angled; 100% protected against mismating; clamping collar; Pin spacing 5 mm; 12-pole; light gray	www.wago.com/722-242/031-000
	Item no.: 722-242/039-000 THT female header; 0.6 x 1.0 mm solder pin; angled; 100% protected against mismating; Locking lever; Pin spacing 5 mm; 12-pole; light gray	www.wago.com/722-242/039-000
	Item no.: 722-242/047-000 THT female header; 0.6 x 1.0 mm solder pin; angled; 100% protected against mismating; Spacer flange; Pin spacing 5 mm; 12-pole; light gray	www.wago.com/722-242/047-000

Downloads

Documentation

Additional Information

Technical explanations	Apr 3, 2019	pdf 3.6 MB	Download

CAD/CAE-Data

CAD data

2D/3D Models 721-472/001-000	URL	Download

CAE data

EPLAN Data Portal 721-472/001-000	URL	Download

PCB Design

Symbol and Footprint 721-472/001-000	URL	Download

CAx data for your PCB design, consisting of "schematic symbols and PCB footprints", allow easy integration of the WAGO component into your development environment.

Supported formats:

- Accel EDA 14 & 15
- Altium 6 to current version

Subject to changes. Please also observe the further product documentation!

WAGO Kontakttechnik GmbH & Co. KG
Hansastr. 27
32423 Minden
Phone: +49571 887-0 | Fax: +49571 887-169
Email: info.de@wago.com | Web: www.wago.com

Do you have any questions about our products?
We are always happy to take your call at +49 (571) 887-44222.

- Cadence Allegro
- DesignSpark
- Eagle Libraries
- KiCad
- Mentor Graphics BoardStation
- Mentor Graphics Design Architect
- Mentor Graphics Design Expedition 99 and 2000
- OrCAD 9.X PCB and Capture
- PADS PowerPCB 3, 3.5, 4.X, and 5.X
- PADS PowerPCB and PowerLogic 3.0
- PCAD 2000, 2001, 2002, 2004, and 2006
- Pulsonix 8.5 or newer
- STL
- 3D STEP
- TARGET 3001!
- View Logic ViewDraw
- Quadcept
- Zuken CadStar 3 and 4
- Zuken CR-5000 and CR-8000

PCB Component Libraries (EDA), PCB CAD Library Ultra Librarian

Installation Notes

Coding

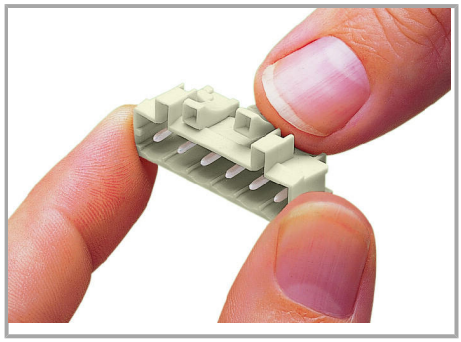

Coding a male header – fitting coding key(s).

Product family

MCS MIDI

Subject to changes. Please also observe the further product documentation!

WAGO Kontakttechnik GmbH & Co. KG
Hansastr. 27
32423 Minden
Phone: +49571 887-0 | Fax: +49571 887-169
Email: info.de@wago.com | Web: www.wago.com

Do you have any questions about our products?
We are always happy to take your call at +49 (571) 887-44222.

Learn more about the product family.

Show all products from the family

WAGO Kontakttechnik GmbH & Co. KG
Hansastr. 27
32423 Minden
Phone: +49571 887-0 | Fax: +49571 887-169
Email: info.de@wago.com | Web: www.wago.com

Do you have any questions about our products?
We are always happy to take your call at +49 (571) 887-44222.