Data sheet | Item number: 286-662

Current flow monitoring module; DC currents; Monitoring range: 0.4 A – 3.5 A; 1 make contact; light gray

www.wago.com/286-662

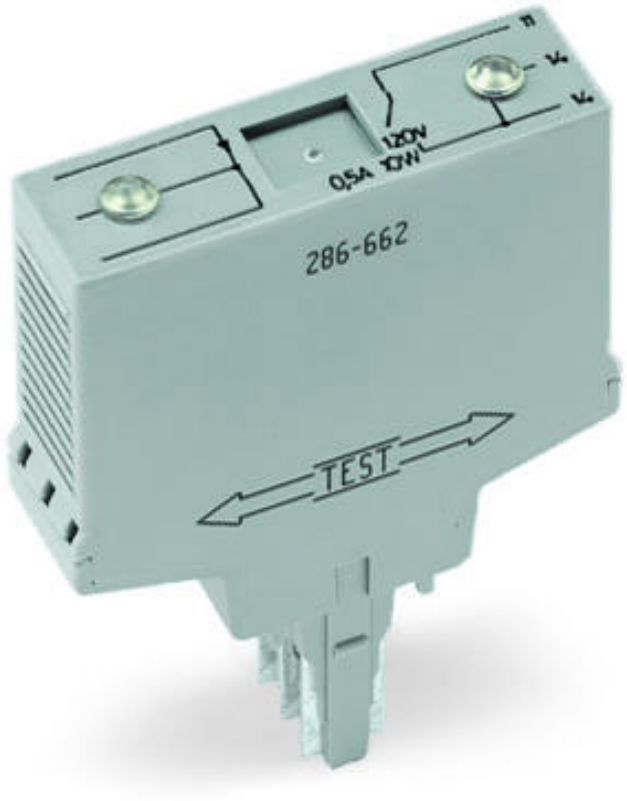

RoHS Compliant ✓ BOMcheck.net **Color:**

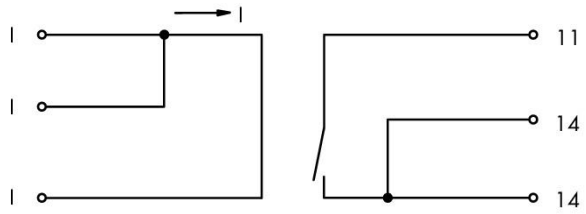

Subject to changes. Please also observe the further product documentation!

WAGO Kontakttechnik GmbH & Co. KG
Hansastr. 27
32423 Minden
Phone: +49571 887-0 | Fax: +49571 887-169
Email: info.de@wago.com | Web: www.wago.com

Do you have any questions about our products?
We are always happy to take your call at +49 (571) 887-44222.

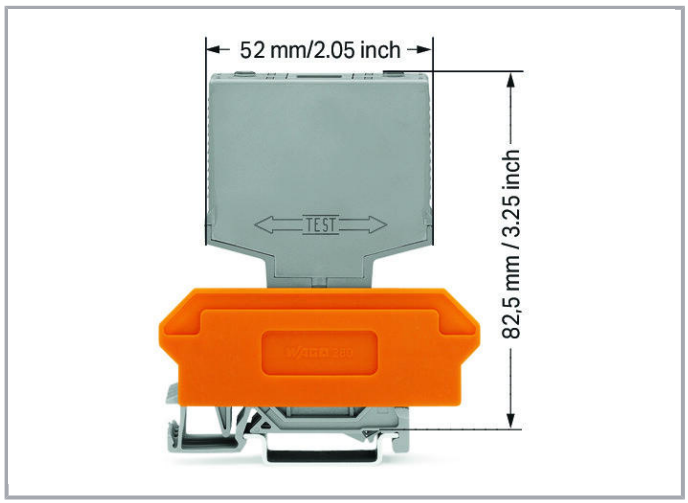

Data

Electrical data

Operating voltage	DC 12 … 28 V
Current consumption at supply voltage	0
Voltage drop at input	24 … 210 mV
Max. measuring span	0.4 … 3.5 ADC (−20 … +40 °C); 0.4 … 3 ADC (−20 … +60 °C); 0.4 … 2 ADC (−20 … +70 °C)
Turn on / off point	0.35 A / 0.07 A
Response time	0.5 ms
Number of make contacts/switch on contacts	1
Limiting continuous current	0,5 A
Max. switching voltage	DC 200 V
Max. switching power (resistive)	DC 10 W

Safety and protection:

Dielectric strength input/output (AC, 1 min)	1.5

Geometrical Data

Height from upper-edge of DIN-35 rail	82,5 mm / 3.25 inch
Depth	52 mm / 2.047 inch

Mechanical data

Type of mounting	Pluggable module for receptacle terminal blocks
Housing design	Plug for carrier terminal blocks

Subject to changes. Please also observe the further product documentation!

WAGO Kontakttechnik GmbH & Co. KG
Hansastr. 27
32423 Minden
Phone: +49571 887-0 | Fax: +49571 887-169
Email: info.de@wago.com | Web: www.wago.com

Do you have any questions about our products?
We are always happy to take your call at +49 (571) 887-44222.

Material Data

Color	light gray
Fire load	0.325 MJ
Weight	22.7 g

Environmental Requirements

Surrounding air (operating) temperature	-25 … 40 °C

Commercial data

Product Group	6 (Interface Electronics)
Packaging type	BOX
Country of origin	DE
GTIN	4045454415730
Customs Tariff No.	85364900990

Counterpart

Compatible products

General accessories		
	Item no.: 280-609 Terminal block for pluggable modules; 6-pole; with 4-conductor terminal blocks; with orange separator; for DIN-rail 35 x 15 and 35 x 7.5; 2.5 mm²; CAGE CLAMP®; 2,50 mm²; gray	www.wago.com/280-609
	Item no.: 280-619 Terminal block for pluggable modules; 6-pole; with 2-conductor terminal blocks; with orange separator; for DIN-rail 35 x 15 and 35 x 7.5; 2.5 mm²; CAGE CLAMP®; 2,50 mm²; gray	www.wago.com/280-619
	Item no.: 280-763 Terminal block for pluggable modules; 6-pole; with 4-conductor terminal blocks; with marker carrier; with orange separator; for DIN-rail 35 x 15 and 35 x 7.5; 2.5 mm²; CAGE CLAMP®; 2,50 mm²; gray	www.wago.com/280-763
Marking accessories		
	Item no.: 209-701 WSB marking card; as card; not stretchable; plain; snap-on type; white	www.wago.com/209-701
	Item no.: 209-701/000-002 WSB marking card; as card; not stretchable; plain; snap-on type; yellow	www.wago.com/209-701/000-002
	Item no.: 209-701/000-005 WSB marking card; as card; not stretchable; plain; snap-on type; red	www.wago.com/209-701/000-005

Subject to changes. Please also observe the further product documentation!

WAGO Kontakttechnik GmbH & Co. KG
Hansastr. 27
32423 Minden
Phone: +49571 887-0 | Fax: +49571 887-169
Email: info.de@wago.com | Web: www.wago.com

Do you have any questions about our products?
We are always happy to take your call at +49 (571) 887-44222.

	Item no.: 209-701/000-006 WSB marking card; as card; not stretchable; plain; snap-on type; blue	www.wago.com/209-701/000-006
	Item no.: 209-701/000-007 WSB marking card; as card; not stretchable; plain; snap-on type; gray	www.wago.com/209-701/000-007
	Item no.: 209-701/000-012 WSB marking card; as card; not stretchable; plain; snap-on type; orange	www.wago.com/209-701/000-012
	Item no.: 209-701/000-017 WSB marking card; as card; not stretchable; plain; snap-on type; light green	www.wago.com/209-701/000-017
	Item no.: 209-701/000-023 WSB marking card; as card; not stretchable; plain; snap-on type; green	www.wago.com/209-701/000-023
	Item no.: 209-701/000-024 WSB marking card; as card; not stretchable; plain; snap-on type; violet	www.wago.com/209-701/000-024

Downloads

Documentation

Instruction Leaflet

		pdf 1.3 MB	Download

Additional Information

Disposal; Electrical and electronic equipment, Packaging	V 1.0.0	pdf 265.8 kB	Download

CAD/CAE-Data

CAE data

WSCAD Universe 286-662	URL	Download

Installation Notes

Subject to changes. Please also observe the further product documentation!

WAGO Kontakttechnik GmbH & Co. KG
Hansastr. 27
32423 Minden
Phone: +49571 887-0 | Fax: +49571 887-169
Email: info.de@wago.com | Web: www.wago.com

Do you have any questions about our products?
We are always happy to take your call at +49 (571) 887-44222.