Data sheet | Item number: 280-574

4-conductor sensor supply terminal block; with ground contact; with colored conductor entries; 2.5 mm²; CAGE CLAMP®; 2,50 mm²; gray

www.wago.com/280-574

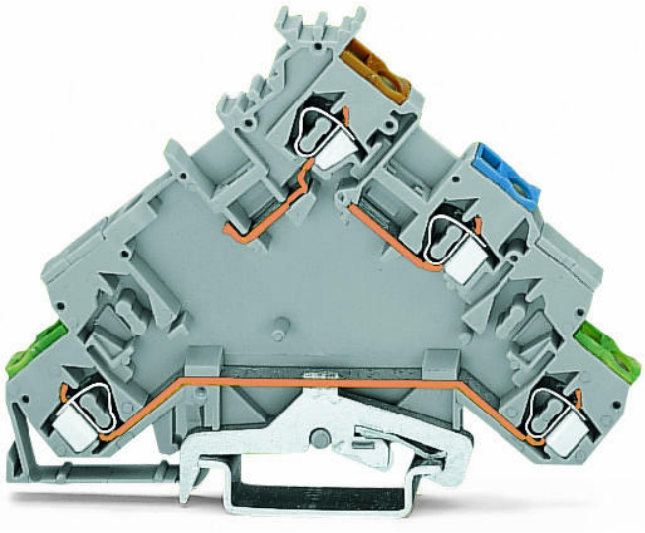

RoHS ✓ Compliant

BOMcheck.net

Color:

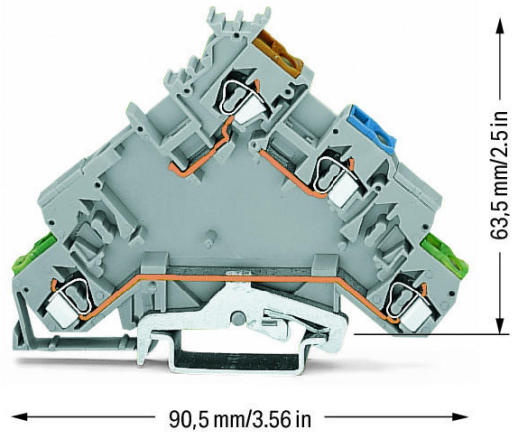

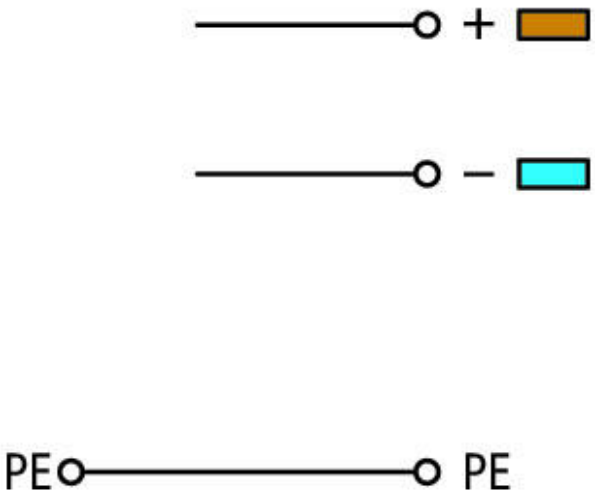

Subject to changes. Please also observe the further product documentation!

WAGO Kontakttechnik GmbH & Co. KG
Hansastr. 27
32423 Minden
Phone: +49571 887-0 | Fax: +49571 887-169
Email: info.de@wago.com | Web: www.wago.com

Do you have any questions about our products?
We are always happy to take your call at +49 (571) 887-44222.

Item description

Note:
Terminating Aluminum Conductors
WAGO spring clamp terminal blocks are suitable for solid aluminum conductors up to 4 mm²/12 AWG if WAGO “Alu-Plus” Contact Paste is used for termination.

“Alu-Plus” Contact Paste Advantages:

- Automatically destroys the oxide film during clamping.
- Prevents fresh oxidation at the clamping point.
- Prevents electrolytic corrosion between aluminum and copper conductors (in the same terminal block).
- Provides long-term protection against corrosion.

Using terminal blocks with CAGE CLAMP® Spring Pressure Connection Technology, **aluminum conductors must first be cleaned with a blade** and then immediately be inserted into the clamping units filled with “Alu-Plus” Contact Paste.

It is also possible to apply WAGO “Alu-Plus” **additionally** on the whole surface of the aluminum conductor before termination.

Please note that the nominal currents must be adapted to the reduced conductivity of the aluminum conductors::
2.5 mm² = 16 A
4 mm² = 22 A

Data
Electrical data

Ratings per IEC/EN 60664-1

Rated voltage (III / 3)	400 V
Rated impulse voltage (III / 3)	6 kV
Rated current	20 A
Legend (ratings)	(III / 3) ≙ Overvoltage category III / Pollution degree 3

Connection data

Connection technology	CAGE CLAMP®
Actuation type	Operating tool
Connectable conductor materials	Copper Aluminum
Solid conductor	0,08 … 2,5 mm² / 28 … 12 AWG
Fine-stranded conductor	0,08 … 2,5 mm² / 28 … 12 AWG
Strip length	8 … 9 mm / 0.31 … 0.35 inch

Subject to changes. Please also observe the further product documentation!

WAGO Kontakttechnik GmbH & Co. KG
Hansastr. 27
32423 Minden
Phone: +49571 887-0 | Fax: +49571 887-169
Email: info.de@wago.com | Web: www.wago.com

Do you have any questions about our products?
We are always happy to take your call at +49 (571) 887-44222.

Total number of connection points	4
Total number of potentials	3
Number of levels	4
Type of wiring	Front-entry wiring
Note (conductor cross-section)	12 AWG: THHN, THWN

Geometrical Data

Width	5 mm / 0.197 inch
Height from upper-edge of DIN-35 rail	63,5 mm / 2.5 inch
Depth	90,5 mm / 3.563 inch

Mechanical data

Design	angled
Type of mounting	DIN-35 rail
Marking level	Center marking

Material Data

Color	gray
Insulating material	Polyamide 66 (PA 66)
Fire load	0.217 MJ
Weight	13.5 g

Commercial data

Product Group	1 (Rail Mounted Terminal Blocks)
Packaging type	BOX
Country of origin	DE
GTIN	4045454093884
Customs Tariff No.	85369010000

Approvals / Certificates

Country specific Approvals

Logo	Approval	Additional Approval Text	Certificate name
	CCA DEKRA Certification B.V.	EN 60947	2160584.53

Subject to changes. Please also observe the further product documentation!

WAGO Kontakttechnik GmbH & Co. KG
Hansastr. 27
32423 Minden
Phone: +49571 887-0 | Fax: +49571 887-169
Email: info.de@wago.com | Web: www.wago.com

Do you have any questions about our products?
We are always happy to take your call at +49 (571) 887-44222.

	CSA DEKRA Certification B.V.	C22.2	1536071

Ship Approvals

Logo	Approval	Additional Approval Text	Certificate name
	ABS American Bureau of Shipping	EN 60947	20-HG1941090-PDA
	DNV GL Det Norske Veritas, Germanischer Lloyd	-	TAE00001V2

UL-Approvals

Logo	Approval	Additional Approval Text	Certificate name
	UR Underwriters Laboratories Inc.	UL 1059	20190731-E45172

Counterpart

Compatible products

Protective Warning Marker

	Item no.: 280-415 Protective warning marker; with high-voltage symbol, black; for 5 terminal blocks; yellow	www.wago.com/280-415

Jumper

	Item no.: 210-103 Wire commoning chain; insulated; 50 connections; black	www.wago.com/210-103

Subject to changes. Please also observe the further product documentation!

WAGO Kontakttechnik GmbH & Co. KG
Hansastr. 27
32423 Minden
Phone: +49571 887-0 | Fax: +49571 887-169
Email: info.de@wago.com | Web: www.wago.com

Do you have any questions about our products?
We are always happy to take your call at +49 (571) 887-44222.

	Item no.: 210-123 Wire commoning chain; insulated; 50 connections	www.wago.com/210-123
	Item no.: 249-123 Push-in type wire jumper; insulated; wire length 180 mm; Conductor cross section 0.75 mm²	www.wago.com/249-123
	Item no.: 249-125 Push-in type wire jumper; insulated; wire length 60 mm; Conductor cross section 0.75 mm²	www.wago.com/249-125
	Item no.: 249-126 Push-in type wire jumper; insulated; wire length 110 mm; Conductor cross section 0.75 mm²	www.wago.com/249-126
	Item no.: 249-127 Push-in type wire jumper; insulated; wire length 250 mm; Conductor cross section 0.75 mm²	www.wago.com/249-127
	Item no.: 280-402 Adjacent jumper; insulated; IN = IN terminal block; gray	www.wago.com/280-402
	Item no.: 280-482 Comb-style jumper bar; insulated; 2-way; IN = IN terminal block; gray	www.wago.com/280-482
	Item no.: 280-483 Comb-style jumper bar; insulated; 3-way; IN = IN terminal block; gray	www.wago.com/280-483
	Item no.: 280-484 Comb-style jumper bar; insulated; 4-way; IN = IN terminal block; gray	www.wago.com/280-484
	Item no.: 280-485 Comb-style jumper bar; insulated; 5-way; IN = IN terminal block; gray	www.wago.com/280-485
	Item no.: 280-490 Comb-style jumper bar; insulated; 10-way; IN = IN terminal block; gray	www.wago.com/280-490
	Item no.: 280-492 Alternate comb-style jumper bar; insulated; 2-way; IN = IN terminal block; gray	www.wago.com/280-492
	Item no.: 709-110 Wire commoning chain; insulated; 4 connections; 3 x 110 mm; black	www.wago.com/709-110
	Item no.: 709-111 Wire commoning chain; insulated; 3 connections; 2 x 120 mm; black	www.wago.com/709-111
	Item no.: 709-112 Wire commoning chain; insulated; 3 connections; 2 x 170 mm; black	www.wago.com/709-112
	Item no.: 780-452 Staggered jumper; insulated; from 1 to 2; Spacing: 5 mm; suitable for 2-conductor female plugs; gray	www.wago.com/780-452
	Item no.: 780-453 Staggered jumper; insulated; from 1 to 3; Spacing: 5 mm; suitable for 2-conductor female plugs; gray	www.wago.com/780-453

Subject to changes. Please also observe the further product documentation!

WAGO Kontakttechnik GmbH & Co. KG
Hansastr. 27
32423 Minden
Phone: +49571 887-0 | Fax: +49571 887-169
Email: info.de@wago.com | Web: www.wago.com

Do you have any questions about our products?
We are always happy to take your call at +49 (571) 887-44222.

	Item no.: 780-454 Staggered jumper; insulated; from 1 to 4; Spacing: 5 mm; suitable for 2-conductor female plugs; gray	www.wago.com/780-454
	Item no.: 780-455 Staggered jumper; insulated; from 1 to 5; Spacing: 5 mm; suitable for 2-conductor female plugs; gray	www.wago.com/780-455
	Item no.: 780-456 Staggered jumper; insulated; from 1 to 6; Spacing: 5 mm; suitable for 2-conductor female plugs; gray	www.wago.com/780-456
	Item no.: 780-457 Staggered jumper; insulated; from 1 to 7; Spacing: 5 mm; suitable for 2-conductor female plugs; gray	www.wago.com/780-457
	Item no.: 780-458 Staggered jumper; insulated; from 1 to 8; Spacing: 5 mm; suitable for 2-conductor female plugs; gray	www.wago.com/780-458
Carrier rail		
	Item no.: 210-112 Steel carrier rail; 35 x 7.5 mm; 1 mm thick; 2 m long; slotted; according to EN 60715; "Hole width 25 mm	www.wago.com/210-112
	Item no.: 210-113 Steel carrier rail; 35 x 7.5 mm; 1 mm thick; 2 m long; unslotted; according to EN 60715	www.wago.com/210-113
	Item no.: 210-114 Steel carrier rail; 35 x 15 mm; 1.5 mm thick; 2 m long; unslotted; similar to EN 60715	www.wago.com/210-114
	Item no.: 210-115 Steel carrier rail; 35 x 7.5 mm; 1 mm thick; 2 m long; slotted; according to EN 60715; "Hole width 18 mm	www.wago.com/210-115
	Item no.: 210-118 Steel carrier rail; 35 x 15 mm; 2.3 mm thick; 2 m long; unslotted; according to EN 60715	www.wago.com/210-118
	Item no.: 210-196 Aluminum carrier rail; 35 x 8.2 mm; 1.6 mm thick; 2 m long; unslotted; similar to EN 60715; silver-colored	www.wago.com/210-196
	Item no.: 210-197 Steel carrier rail; 35 x 15 mm; 1.5 mm thick; 2 m long; slotted; similar to EN 60715	www.wago.com/210-197
	Item no.: 210-198 Copper carrier rail; 35 x 15 mm; 2.3 mm thick; 2 m long; unslotted; according to EN 60715; copper-colored	www.wago.com/210-198
	Item no.: 210-504 Steel carrier rail; 35 x 7.5 mm; 1 mm thick; 2 m long; slotted; galvanized; according to EN 60715	www.wago.com/210-504
	Item no.: 210-505 Steel carrier rail; 35 x 7.5 mm; 1 mm thick; 2 m long; unslotted; galvanized; according to EN 60715	www.wago.com/210-505
	Item no.: 210-506 Steel carrier rail; 35 x 15 mm; 1.5 mm thick; 2 m long; unslotted; galvanized; similar to EN 60715	www.wago.com/210-506
	Item no.: 210-508 Steel carrier rail; 35 x 15 mm; 1.5 mm thick; 2 m long; slotted; galvanized; similar to EN 60715	www.wago.com/210-508
ferrule		

Subject to changes. Please also observe the further product documentation!

WAGO Kontakttechnik GmbH & Co. KG
Hansastr. 27
32423 Minden
Phone: +49571 887-0 | Fax: +49571 887-169
Email: info.de@wago.com | Web: www.wago.com

Do you have any questions about our products?
We are always happy to take your call at +49 (571) 887-44222.

	Item no.: 216-101 Ferrule; Sleeve for 0.5 mm² / AWG 22; uninsulated; electro-tin plated	www.wago.com/216-101
	Item no.: 216-102 Ferrule; Sleeve for 0.75 mm² / AWG 20; uninsulated; electro-tin plated	www.wago.com/216-102
	Item no.: 216-103 Ferrule; Sleeve for 1 mm² / AWG 18; uninsulated; electro-tin plated	www.wago.com/216-103
	Item no.: 216-104 Ferrule; Sleeve for 1.5 mm² / AWG 16; uninsulated; electro-tin plated	www.wago.com/216-104
	Item no.: 216-201 Ferrule; Sleeve for 0.5 mm² / 20 AWG; insulated; electro-tin plated; white	www.wago.com/216-201
	Item no.: 216-202 Ferrule; Sleeve for 0.75 mm² / 18 AWG; insulated; electro-tin plated; gray	www.wago.com/216-202
	Item no.: 216-203 Ferrule; Sleeve for 1 mm² / AWG 18; insulated; electro-tin plated; red	www.wago.com/216-203
	Item no.: 216-204 Ferrule; Sleeve for 1.5 mm² / AWG 16; insulated; electro-tin plated; black	www.wago.com/216-204
	Item no.: 216-301 Ferrule; Sleeve for 0.25 mm² / AWG 24; insulated; electro-tin plated; yellow	www.wago.com/216-301
	Item no.: 216-302 Ferrule; Sleeve for 0.34 mm² / 22 AWG; insulated; electro-tin plated; green	www.wago.com/216-302
Marking accessories		
	Item no.: 2009-115 WMB-Inline; for Smart Printer; 1500 pieces on roll; stretchable 5 - 5.2 mm; plain; snap-on type; white	www.wago.com/2009-115
	Item no.: 2009-115/000-002 WMB-Inline; for Smart Printer; 1500 pieces on roll; stretchable 5 - 5.2 mm; plain; snap-on type; yellow	www.wago.com/2009-115/000-002
	Item no.: 2009-115/000-006 WMB-Inline; for Smart Printer; 1500 pieces on roll; stretchable 5 - 5.2 mm; plain; snap-on type; white	www.wago.com/2009-115/000-006
	Item no.: 2009-115/000-007 WMB-Inline; for Smart Printer; 1500 pieces on roll; stretchable 5 - 5.2 mm; plain; snap-on type; gray	www.wago.com/2009-115/000-007
	Item no.: 2009-115/000-012 WMB-Inline; for Smart Printer; 1500 pieces on roll; stretchable 5 - 5.2 mm; plain; snap-on type; white	www.wago.com/2009-115/000-012
	Item no.: 2009-115/000-017 WMB-Inline; for Smart Printer; 1500 pieces on roll; stretchable 5 - 5.2 mm; plain; snap-on type; white	www.wago.com/2009-115/000-017

Subject to changes. Please also observe the further product documentation!

WAGO Kontakttechnik GmbH & Co. KG
Hansastr. 27
32423 Minden
Phone: +49571 887-0 | Fax: +49571 887-169
Email: info.de@wago.com | Web: www.wago.com

Do you have any questions about our products?
We are always happy to take your call at +49 (571) 887-44222.

	Item no.: 2009-115/000-023 WMB-Inline; for Smart Printer; 1500 pieces on roll; stretchable 5 - 5.2 mm; plain; snap-on type; green	www.wago.com/2009-115/000-023
	Item no.: 2009-115/000-024 WMB-Inline; for Smart Printer; 1500 pieces on roll; stretchable 5 - 5.2 mm; plain; snap-on type; white	www.wago.com/2009-115/000-024
	Item no.: 793-501 WMB marking card; as card; not stretchable; plain; snap-on type; white	www.wago.com/793-501
	Item no.: 793-501/000-002 WMB marking card; as card; not stretchable; plain; snap-on type; yellow	www.wago.com/793-501/000-002
	Item no.: 793-501/000-005 WMB marking card; as card; not stretchable; plain; snap-on type; red	www.wago.com/793-501/000-005
	Item no.: 793-501/000-006 WMB marking card; as card; not stretchable; plain; snap-on type; blue	www.wago.com/793-501/000-006
	Item no.: 793-501/000-007 WMB marking card; as card; not stretchable; plain; snap-on type; gray	www.wago.com/793-501/000-007
	Item no.: 793-501/000-012 WMB marking card; as card; not stretchable; plain; snap-on type; orange	www.wago.com/793-501/000-012
	Item no.: 793-501/000-017 WMB marking card; as card; not stretchable; plain; snap-on type; light green	www.wago.com/793-501/000-017
	Item no.: 793-501/000-023 WMB marking card; as card; not stretchable; plain; snap-on type; green	www.wago.com/793-501/000-023
	Item no.: 793-501/000-024 WMB marking card; as card; not stretchable; plain; snap-on type; violet	www.wago.com/793-501/000-024
	Item no.: 793-5501 WMB marking card; as card; for terminal block width 5 - 17.5 mm; stretchable 5 - 5.2 mm; plain; snap-on type; white	www.wago.com/793-5501
	Item no.: 793-5501/000-002 WMB marking card; as card; for terminal block width 5 - 17.5 mm; stretchable 5 - 5.2 mm; plain; snap-on type; yellow	www.wago.com/793-5501/000-002
	Item no.: 793-5501/000-005 WMB marking card; as card; for terminal block width 5 - 17.5 mm; stretchable 5 - 5.2 mm; plain; snap-on type; red	www.wago.com/793-5501/000-005

Subject to changes. Please also observe the further product documentation!

WAGO Kontakttechnik GmbH & Co. KG
Hansastr. 27
32423 Minden
Phone: +49571 887-0 | Fax: +49571 887-169
Email: info.de@wago.com | Web: www.wago.com

Do you have any questions about our products?
We are always happy to take your call at +49 (571) 887-44222.

	Item no.: 793-5501/000-006 WMB marking card; as card; for terminal block width 5 - 17.5 mm; stretchable 5 - 5.2 mm; plain; snap-on type; blue	www.wago.com/793-5501/000-006
	Item no.: 793-5501/000-007 WMB marking card; as card; for terminal block width 5 - 17.5 mm; stretchable 5 - 5.2 mm; plain; snap-on type; gray	www.wago.com/793-5501/000-007
	Item no.: 793-5501/000-012 WMB marking card; as card; for terminal block width 5 - 17.5 mm; stretchable 5 - 5.2 mm; plain; snap-on type; orange	www.wago.com/793-5501/000-012
	Item no.: 793-5501/000-017 WMB marking card; as card; for terminal block width 5 - 17.5 mm; stretchable 5 - 5.2 mm; plain; snap-on type; green	www.wago.com/793-5501/000-017
	Item no.: 793-5501/000-023 WMB marking card; as card; for terminal block width 5 - 17.5 mm; stretchable 5 - 5.2 mm; plain; snap-on type; light green	www.wago.com/793-5501/000-023
	Item no.: 793-5501/000-024 WMB marking card; as card; for terminal block width 5 - 17.5 mm; stretchable 5 - 5.2 mm; plain; snap-on type; violet	www.wago.com/793-5501/000-024
tools		
	Item no.: 210-657 Operating tool; Blade: 3.5 x 0.5 mm; with a partially insulated shaft; short	www.wago.com/210-657
	Item no.: 210-658 Operating tool; Blade: 3.5 x 0.5 mm; with a partially insulated shaft; angled; short	www.wago.com/210-658
	Item no.: 210-720 Operating tool; Blade: 3.5 x 0.5 mm; with a partially insulated shaft	www.wago.com/210-720
assembling		
	Item no.: 709-154 Cover; Type 2; suitable for cover carrier, type 2; 1 m long; transparent	www.wago.com/709-154
Insulation stop		
	Item no.: 280-470 Insulation stop; 0.08 - 0.2 mm² "s" (0.14 mm² "f-st"); 5 pieces/strip; white	www.wago.com/280-470
	Item no.: 280-471 Insulation stop; 0.25 - 0.5 mm²; 5 pieces/strip; light gray	www.wago.com/280-471
	Item no.: 280-472 Insulation stop; 0.75 - 1 mm²; 5 pieces/strip	www.wago.com/280-472
End plate		
	Item no.: 280-320 End and intermediate plate; 1 mm thick; for quadruple-deck terminal blocks; gray	www.wago.com/280-320

Subject to changes. Please also observe the further product documentation!

WAGO Kontakttechnik GmbH & Co. KG
Hansastr. 27
32423 Minden
Phone: +49571 887-0 | Fax: +49571 887-169
Email: info.de@wago.com | Web: www.wago.com

Do you have any questions about our products?
We are always happy to take your call at +49 (571) 887-44222.

Item no.: 280-323
End and intermediate plate; 1 mm thick; for quadruple-deck terminal blocks; orange

www.wago.com/280-323

Downloads

Documentation

Additional Information

Technical explanations	Apr 3, 2019	pdf 2.1 MB	Download

CAD/CAE-Data

CAE data

EPLAN Data Portal 280-574	URL	Download
WSCAD Universe 280-574	URL	Download

Installation Notes

Installation

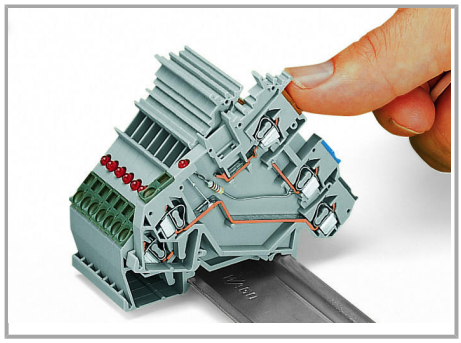

Snapping a terminal block onto the carrier rail – terminal blocks with a grounding foot automatically establish a direct contact to the rail.

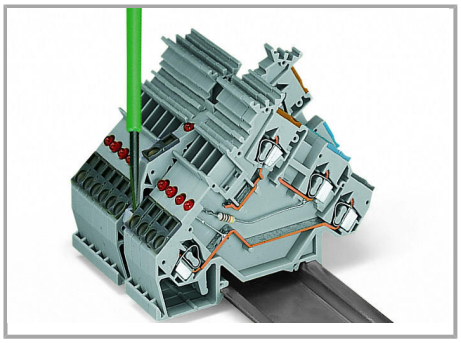

Removing a terminal block from the carrier rail. Notice: Remove jumper contacts first.

Conductor termination

Subject to changes. Please also observe the further product documentation!

WAGO Kontakttechnik GmbH & Co. KG
Hansastr. 27
32423 Minden
Phone: +49571 887-0 | Fax: +49571 887-169
Email: info.de@wago.com | Web: www.wago.com

Do you have any questions about our products?
We are always happy to take your call at +49 (571) 887-44222.

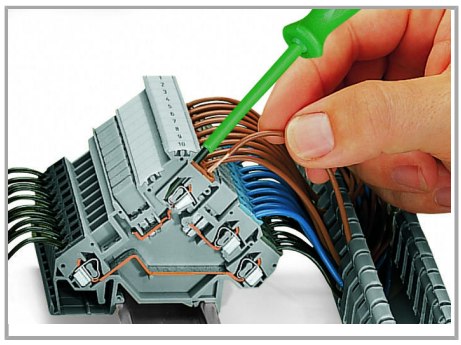

CAGE CLAMP® connection

Inserting a conductor via straight operating tool (210-720).

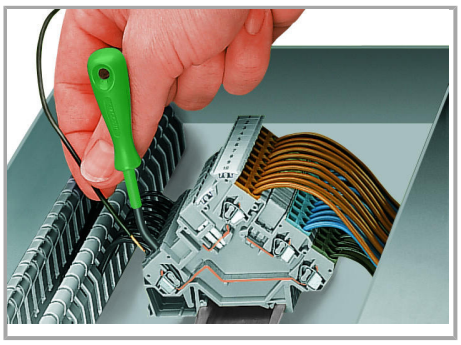

CAGE CLAMP® connection

Inserting a conductor via angled operating tool (210-658).

Commoning

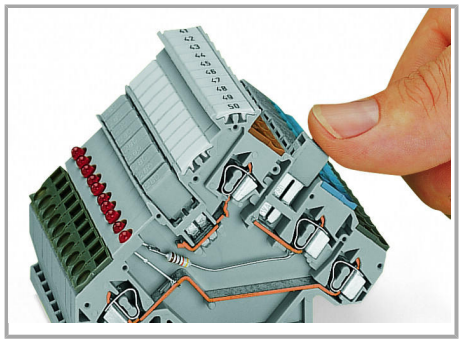

Commoning using an adjacent jumper (280-402).

Push jumper down until fully inserted.

Testing

WAGO Kontakttechnik GmbH & Co. KG
Hansastr. 27
32423 Minden
Phone: +49571 887-0 | Fax: +49571 887-169
Email: info.de@wago.com | Web: www.wago.com

Do you have any questions about our products?
We are always happy to take your call at +49 (571) 887-44222.

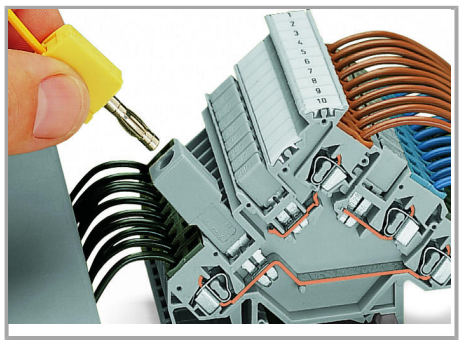

Testing via banana plug and test plug adapter (209-170).

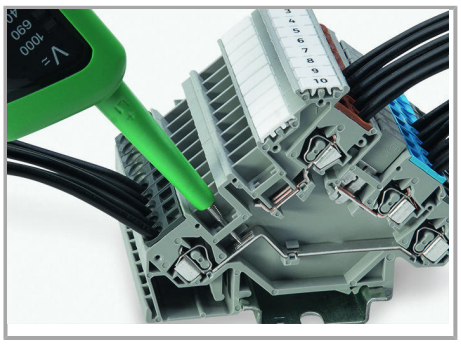

Testing via voltage tester directly on the current bar.

Application

Terminal block assembly:

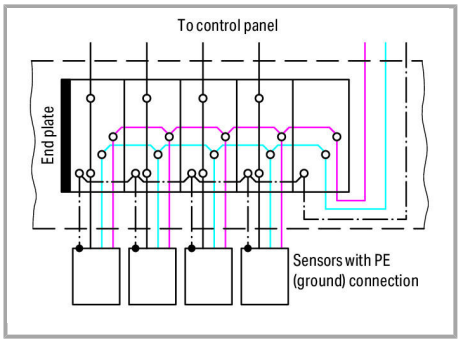

Power supply from sensor side

Sensor terminal blocks

Installation

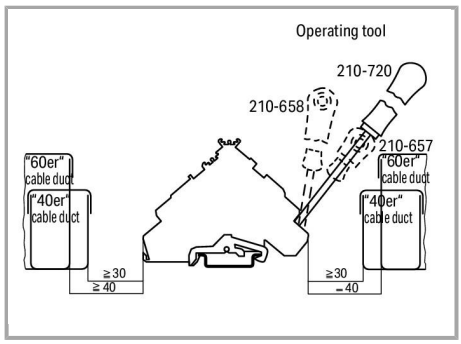

Min. mounting distance – terminal blocks to cable duct

Subject to changes. Please also observe the further product documentation!

WAGO Kontakttechnik GmbH & Co. KG
Hansastr. 27
32423 Minden
Phone: +49571 887-0 | Fax: +49571 887-169
Email: info.de@wago.com | Web: www.wago.com

Do you have any questions about our products?
We are always happy to take your call at +49 (571) 887-44222.

Marking

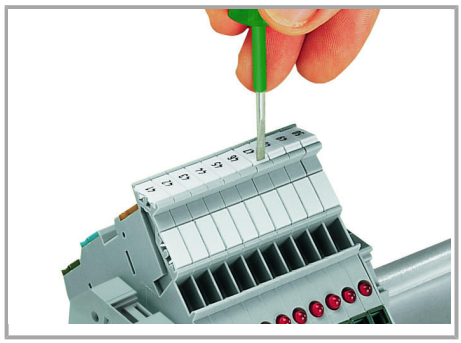

Labeling via WMB Multi Marking System.

Subject to changes. Please also observe the further product documentation!

WAGO Kontakttechnik GmbH & Co. KG
Hansastr. 27
32423 Minden
Phone: +49571 887-0 | Fax: +49571 887-169
Email: info.de@wago.com | Web: www.wago.com

Do you have any questions about our products?
We are always happy to take your call at +49 (571) 887-44222.