Data sheet | Item number: 272-133

Power supply connector; 1,50 mm²; white

www.wago.com/272-133

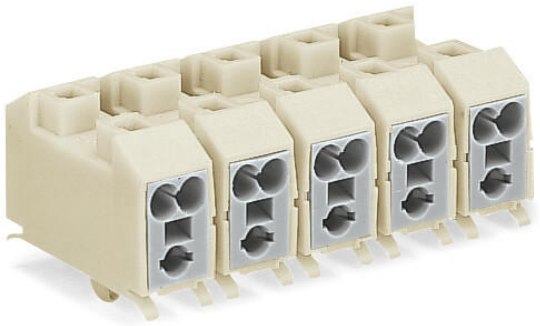

RoHS Compliant ✓ BOMcheck.net Color:

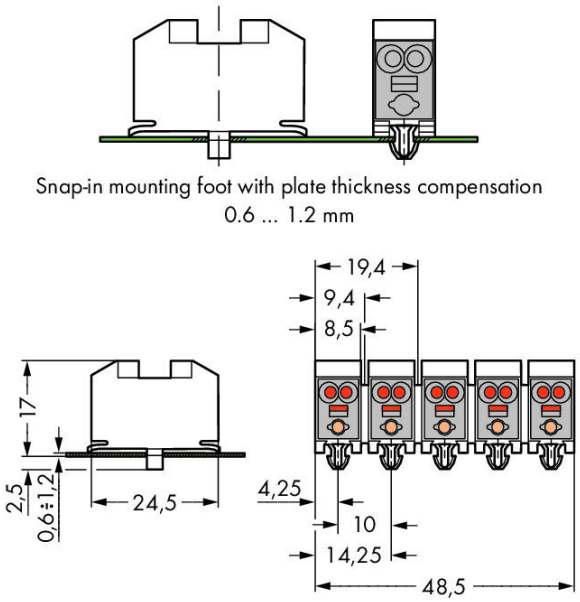

Data

Electrical data

Ratings per IEC/EN 60664-1

Rated voltage (III / 2)	400 V
Rated impulse voltage (III / 2)	4 kV
Rated current	18 A
Legend (ratings)	(III / 2) ≙ Overvoltage category III / Pollution degree 2

Approvals per UL 1059

Approvals per	UL 1059

Connection data

Connection technology	PUSH WIRE®
Strip length	8 … 9 mm / 0.31 … 0.35 inch

Subject to changes. Please also observe the further product documentation!

WAGO Kontakttechnik GmbH & Co. KG
Hansastr. 27
32423 Minden
Phone: +49571 887-0 | Fax: +49571 887-169
Email: info.de@wago.com | Web: www.wago.com

Do you have any questions about our products?
We are always happy to take your call at +49 (571) 887-44222.

No. of poles	3
Total number of connection points	12
Total number of potentials	3
Number of connection types	1

Geometrical Data

Width	28,5 mm / 1.122 inch
Height	19,5 mm / 0.767 inch
Depth	24,5 mm / 0.965 inch

Material Data

Color	white
Fire load	0.162 MJ
Weight	9.6 g

Commercial data

Product Group	8 (Misc. Chassis Mount Blocks)
Packaging type	bag
Country of origin	DE
GTIN	4044918429566
Customs Tariff No.	85369010000

Approvals / Certificates

Country specific Approvals

Logo	Approval	Additional Approval Text	Certificate name
	CCA DEKRA Certification B.V.	EN 60998	NTR NL 7384
	CCA DEKRA Certification B.V.	EN 60998	2176190.01
	CSA DEKRA Certification B.V.	C22.2 No. 158	70048844

Subject to changes. Please also observe the further product documentation!

WAGO Kontakttechnik GmbH & Co. KG
Hansastr. 27
32423 Minden
Phone: +49571 887-0 | Fax: +49571 887-169
Email: info.de@wago.com | Web: www.wago.com

Do you have any questions about our products?
We are always happy to take your call at +49 (571) 887-44222.

Ship Approvals

Logo	Approval	Additional Approval Text	Certificate name
	ABS American Bureau of Shipping	-	18-HG1755093-PDA
	BV Bureau Veritas S.A.	EN 60998	11914/C0 BV
	DNV GL Det Norske Veritas, Germanischer Lloyd	-	TAE000016Z
	LR Lloyds Register	IEC 61984	96/20035 (E5)

UL-Approvals

Logo	Approval	Additional Approval Text	Certificate name
	UR Underwriters Laboratories Inc.	UL 1059	20190731-E45172

Counterpart

Compatible products

Marking accessories

	Item no.: 210-110 Fiber-tip pen	www.wago.com/210-110

tools

	Item no.: 271-120 Push-button; for retrofitting; loose	www.wago.com/271-120

Subject to changes. Please also observe the further product documentation!

WAGO Kontakttechnik GmbH & Co. KG
Hansastr. 27
32423 Minden
Phone: +49571 887-0 | Fax: +49571 887-169
Email: info.de@wago.com | Web: www.wago.com

Do you have any questions about our products?
We are always happy to take your call at +49 (571) 887-44222.

Downloads

Documentation

Additional Information

Technical explanations	Apr 3, 2019	pdf 3.6 MB	Download

CAD/CAE-Data

CAE data

EPLAN Data Portal 272-133	URL	Download
WSCAD Universe 272-133	URL	Download

Installation Notes

Subject to changes. Please also observe the further product documentation!

WAGO Kontakttechnik GmbH & Co. KG
Hansastr. 27
32423 Minden
Phone: +49571 887-0 | Fax: +49571 887-169
Email: info.de@wago.com | Web: www.wago.com

Do you have any questions about our products?
We are always happy to take your call at +49 (571) 887-44222.