1-conductor female plug; Gripping plate; direct marking; 1.5 mm²; Pin spacing 3.5 mm; 8-pole; 1,50 mm²; light gray

www.wago.com/2091-1108/000-1000

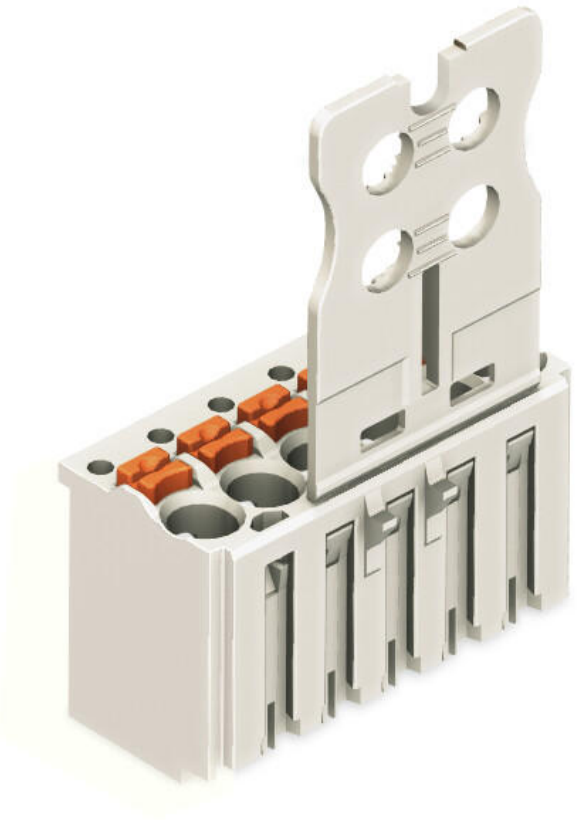

RoHS ✓ Compliant

BOMcheck.net

Color:

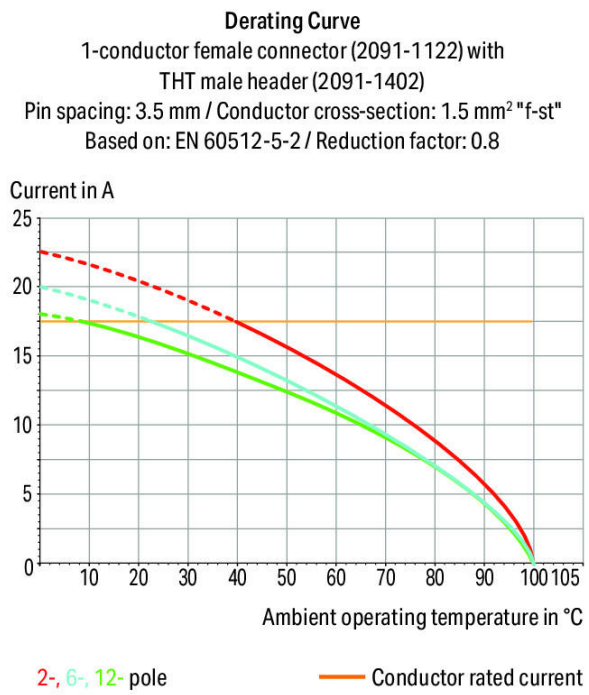

Subject to changes. Please also observe the further product documentation!

WAGO Kontakttechnik GmbH & Co. KG
Hansastr. 27
32423 Minden
Phone: +49571 887-0 | Fax: +49571 887-169
Email: info.de@wago.com | Web: www.wago.com

Do you have any questions about our products?
We are always happy to take your call at +49 (571) 887-44222.

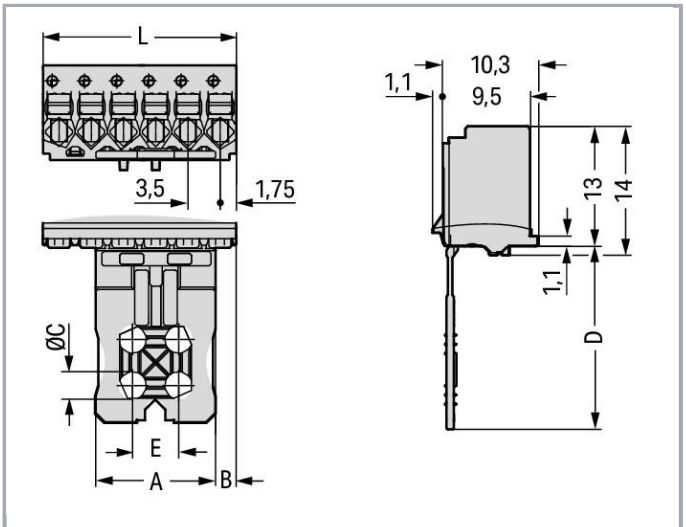

L = (pole no. – 1) x pin spacing

Item description

- Universal connection for all conductor types
- Simple, push-in termination of solid and ferruled conductors
- Easy-to-use design does not require specialty tools
- Ability to wire while mated or unmated
- Test port parallel to conductor entry – touch contact
- Integrated locking latches prevent accidental disconnection

Safety information 1:

The **picoMAX® pluggable connection system** is designed without breaking capacity for compliance with DIN EN 61984. When used as intended, MCS Connectors shall not be connected/disconnected when live or under load. The circuit design should ensure header pins, which can be touched, are not live when unmated.

Data

Electrical data

Ratings per IEC/EN 60664-1

Ratings per	IEC/EN 60664-1
Rated voltage (III / 3)	160 V
Rated impulse voltage (III / 3)	2.5 kV
Rated voltage (III / 2)	160 V

Subject to changes. Please also observe the further product documentation!

WAGO Kontakttechnik GmbH & Co. KG
Hansastr. 27
32423 Minden
Phone: +49571 887-0 | Fax: +49571 887-169
Email: info.de@wago.com | Web: www.wago.com

Do you have any questions about our products?
We are always happy to take your call at +49 (571) 887-44222.

Rated impulse voltage (III / 2)	2.5 kV
Rated voltage (II / 2)	320 V
Rated impulse voltage (II / 2)	2.5 kV
Rated current	10 A
Legend (ratings)	(III / 2) ≙ Overvoltage category III / Pollution degree 2

Approvals per UL 1059

Rated voltage UL (Use Group B)	300 V
Rated current UL (Use Group B)	10 A
Rated voltage UL (Use Group D)	300 V
Rated current UL (Use Group D)	10 A
Approvals per	UL 1059

Connection data

Connection technology	Push-in CAGE CLAMP®
Actuation type	Push-button
Solid conductor	0.2 … 1.5 mm² / 24 … 14 AWG
Fine-stranded conductor	0.2 … 1.5 mm² / 24 … 14 AWG
Fine-stranded conductor with ferrule with plastic collar	0.25 … 0.75 mm²
Fine-stranded conductor with ferrule without plastic collar	0.25 … 1.5 mm²
Strip length	8 … 9 mm / 0.31 … 0.35 inch
No. of poles	8
Total number of connection points	8
Total number of potentials	8
Number of connection types	1
Number of levels	1

Geometrical Data

Pin spacing	3.5 mm / 0.138 inch
Width	28 mm / 1.102 inch
Height	33 mm / 1.299 inch
Depth	11.4 mm / 0.449 inch

Mechanical data

Design	With gripping plate

Subject to changes. Please also observe the further product documentation!

WAGO Kontakttechnik GmbH & Co. KG
Hansastr. 27
32423 Minden
Phone: +49571 887-0 | Fax: +49571 887-169
Email: info.de@wago.com | Web: www.wago.com

Do you have any questions about our products?
We are always happy to take your call at +49 (571) 887-44222.

Plug connection

Contact type (pluggable connector)	Female connector/socket
Connector connection type	for conductors
Mismating protection	No

Material Data

Color	light gray
Material group	I
Insulating material	Polyphthalamide (PPA GF)
Flammability class per UL94	V0
Clamping spring material	Chrome nickel spring steel (CrNi)
Contact material	Electrolytic copper (E_{Cu})
Contact plating	tin-plated
Fire load	0.094 MJ
Weight	3.8 g

Environmental Requirements

Limit temperature range	-60 … +100 °C

Commercial data

Packaging type	BOX
Country of origin	DE
GTIN	4050821365891
Customs Tariff No.	85366990990

Approvals / Certificates

Country specific Approvals

Logo	Approval	Additional Approval Text	Certificate name
	CB DEKRA Certification B.V.	IEC 61984	NL-49736 /A1
	CSA DEKRA Certification B.V.	C22.2	2362521
	KEMA/KEUR DEKRA Certification B.V.	EN 61984	71-102260

Subject to changes. Please also observe the further product documentation!

WAGO Kontakttechnik GmbH & Co. KG
Hansastr. 27
32423 Minden
Phone: +49571 887-0 | Fax: +49571 887-169
Email: info.de@wago.com | Web: www.wago.com

Do you have any questions about our products?
We are always happy to take your call at +49 (571) 887-44222.

UL-Approvals

Logo	Approval	Additional Approval Text	Certificate name
	UL Underwriters Laboratories Inc.	UL 1977	20190909-E45171

Counterpart

	Item no.2091-1428 THT male header; 1.0 mm Ø solder pin; angled; Pin spacing 3.5 mm; 8-pole; light gray	www.wago.com/2091-1428
	Item no.2091-1408 THT male header; 1.0 mm Ø solder pin; straight; Pin spacing 3.5 mm; 8-pole; light gray	www.wago.com/2091-1408
	Item no.2091-1528/002-000 1-conductor male connector; Integrated release lever; 1.5 mm²; Pin spacing 3.5 mm; 8-pole; 1,50 mm²; light gray	www.wago.com/2091-1528/002-000

Compatible products

Coding

	Item no.: 2091-1610 Coding key carrier; suitable for 3.5 mm pin spacing; orange	www.wago.com/2091-1610

Test Accessories

	Item no.: 735-500 Test pin; 1 mm Ø; with solder connection for test wire	www.wago.com/735-500

tools

	Item no.: 210-719 Operating tool; Blade: 2.5 x 0.4 mm; with a partially insulated shaft	www.wago.com/210-719

Subject to changes. Please also observe the further product documentation!

WAGO Kontakttechnik GmbH & Co. KG
Hansastr. 27
32423 Minden
Phone: +49571 887-0 | Fax: +49571 887-169
Email: info.de@wago.com | Web: www.wago.com

Do you have any questions about our products?
We are always happy to take your call at +49 (571) 887-44222.

Downloads

Documentation

Additional Information

Technical explanations	Apr 3, 2019	pdf 3.6 MB	Download

Installation Notes

Locking

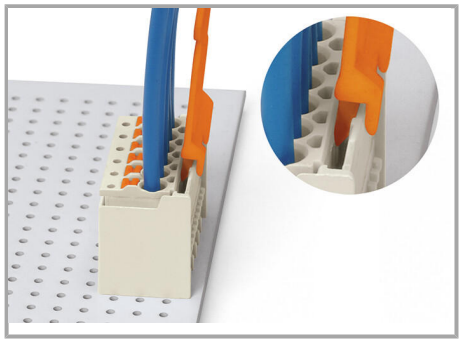

Disconnecting female connector via unlocking tool. Plug unlocking tool into the male locking latch.

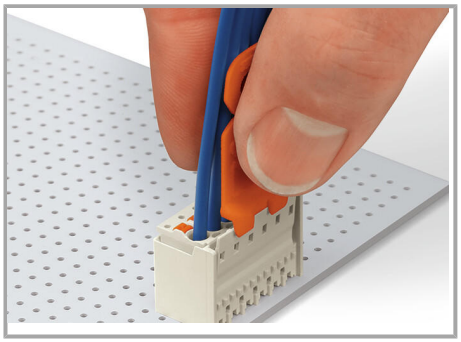

Insert unlocking tool until it hits backstop. Wedge opens locking latch.

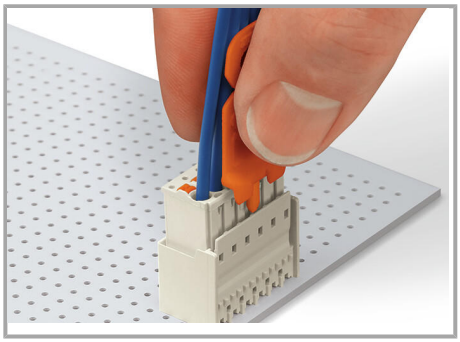

Pull on both unlocking tool and conductors to remove female connector from male header.

Inserting a conductor

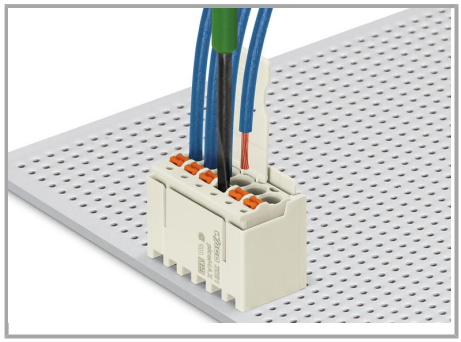

Inserting fine-stranded conductor into mated female connector via push-button.

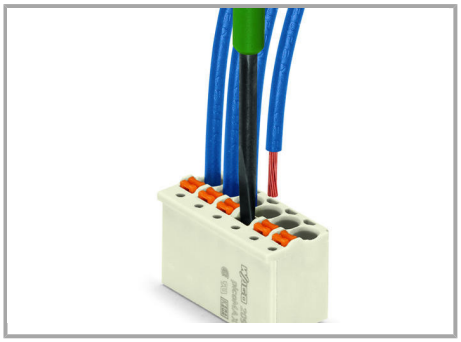

Inserting fine-stranded conductor into unmated female connector via push-button.

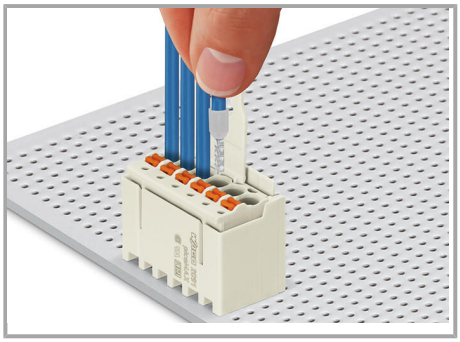

Inserting solid and ferruled conductors via push-in termination

Marking

Subject to changes. Please also observe the further product documentation!

WAGO Kontakttechnik GmbH & Co. KG
Hansastr. 27
32423 Minden
Phone: +49571 887-0 | Fax: +49571 887-169
Email: info.de@wago.com | Web: www.wago.com

Do you have any questions about our products?
We are always happy to take your call at +49 (571) 887-44222.

Pole marking via factory direct printing.

Coding

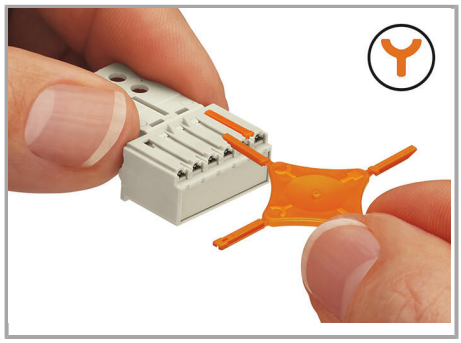

Coding a female connector (via coding key carrier and two keys for female connector, see symbol).

Testing

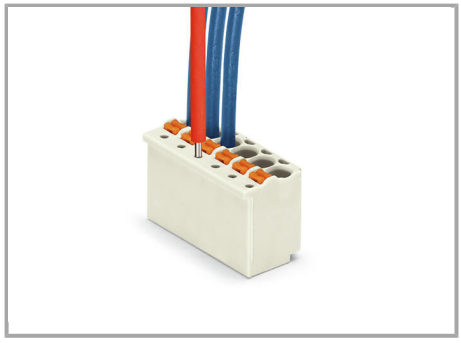

Testing with 1 mm Ø test pin, tip contact.

Product family

picoMAX
Show all products from the family

Subject to changes. Please also observe the further product documentation!

WAGO Kontakttechnik GmbH & Co. KG
Hansastr. 27
32423 Minden
Phone: +49571 887-0 | Fax: +49571 887-169
Email: info.de@wago.com | Web: www.wago.com

Do you have any questions about our products?
We are always happy to take your call at +49 (571) 887-44222.