Data sheet | Item number: 2002-2201/097-000

Double-deck terminal block; with gray separator; L; oversized; contact inserts only on upper deck; for DIN-rail 35 x 15 and 35 x 7.5; 2.5 mm²; Push-in CAGE CLAMP®; 2,50 mm²; gray

www.wago.com/2002-2201/097-000

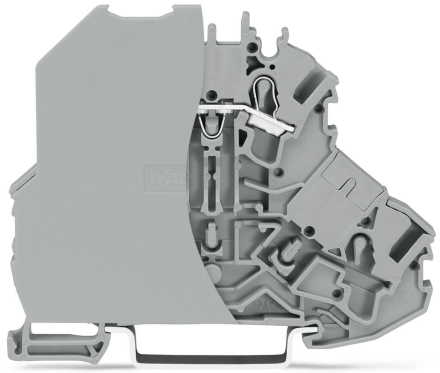

RoHS Compliant ✓

BOMcheck.net

Color:

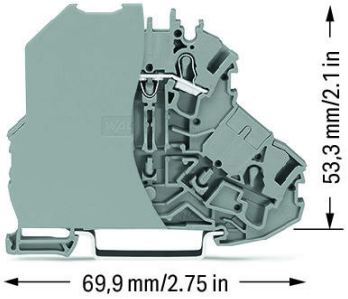

Subject to changes. Please also observe the further product documentation!

WAGO Kontakttechnik GmbH & Co. KG
Hansastr. 27
32423 Minden
Phone: +49571 887-0 | Fax: +49571 887-169
Email: info.de@wago.com | Web: www.wago.com

Do you have any questions about our products?
We are always happy to take your call at +49 (571) 887-44222.

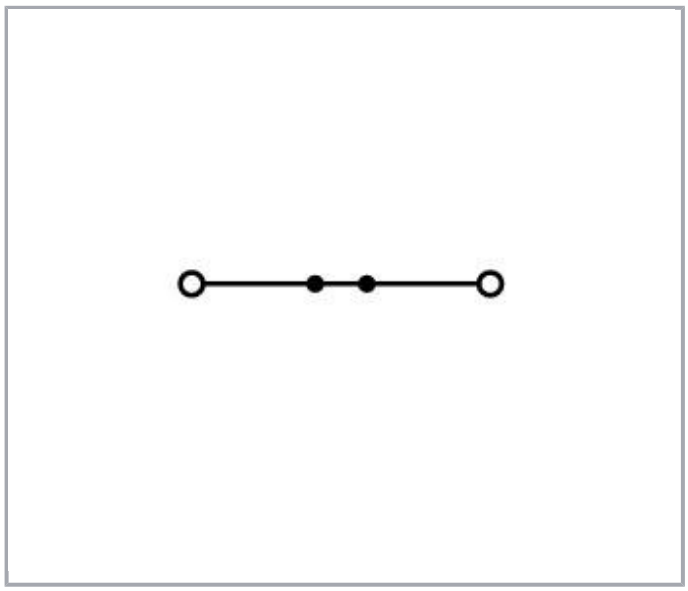

Data

Electrical data

Voltage type (1)	AC/DC
Voltage type (2)	DC

Ratings per IEC/EN 60664-1

Ratings per	IEC/EN 60947-7-1
Rated voltage (III / 3)	1000 V
Rated impulse voltage (III / 3)	12 kV
Rated current	24 A
Rated voltage (III / 3) 2	1500 V
Rated impulse voltage (III / 3) 2	12 kV
Legend (ratings)	(III / 3) ≙ Overvoltage category III / Pollution degree 3

Connection data

Connection technology	Push-in CAGE CLAMP®
Actuation type	Push-in Open Tool Slot
Connectable conductor materials	Copper
Nominal cross section	2,5 mm²
Solid conductor	0,25 … 4 mm² / 22 … 12 AWG
Solid conductor, push-in termination	0,75 … 4 mm² / 18 … 12 AWG

Subject to changes. Please also observe the further product documentation!

WAGO Kontakttechnik GmbH & Co. KG
Hansastr. 27
32423 Minden
Phone: +49571 887-0 | Fax: +49571 887-169
Email: info.de@wago.com | Web: www.wago.com

Do you have any questions about our products?
We are always happy to take your call at +49 (571) 887-44222.

Fine-stranded conductor	0,25 … 4 mm² / 22 … 12 AWG
Fine-stranded conductor with ferrule with plastic collar	1 … 2,5 mm² / 18 … 12 AWG
Fine-stranded conductor with ferrule, push-in termination, from	1 … 2,5 mm² / 18 … 12 AWG
Strip length	10 … 12 mm / 0.39 … 0.47 inch
Total number of connection points	2
Total number of potentials	1
Number of levels	2
Type of wiring	Front-entry wiring
Note (conductor cross-section)	Depending on the conductor characteristic, a conductor with a smaller cross-section can also be inserted via push-in termination.

Geometrical Data

Width	7,2 mm / 0.283 inch
Height from upper-edge of DIN-35 rail	53,3 mm / 2.098 inch
Depth	69,9 mm / 2.752 inch

Mechanical data

Design	horizontal type
Type of mounting	DIN-35 rail
Potential marking	L
Marking level	Center/side marking

Material Data

Color	gray
Insulating material	Polyamide 66 (PA 66)
Weight	13.2 g

Commercial data

Packaging type	BOX
Country of origin	DE
GTIN	4055143420242
Customs Tariff No.	85369010000

Approvals / Certificates

Country specific Approvals

Logo	Approval	Additional Approval Text	Certificate name

Subject to changes. Please also observe the further product documentation!

WAGO Kontakttechnik GmbH & Co. KG
Hansastr. 27
32423 Minden
Phone: +49571 887-0 | Fax: +49571 887-169
Email: info.de@wago.com | Web: www.wago.com

Do you have any questions about our products?
We are always happy to take your call at +49 (571) 887-44222.

	CCA DEKRA Certification B.V.	EN 60947	NTR NL 7730
	KEMA/KEUR DEKRA Certification B.V.	EN 60947	71-107687

Ship Approvals

Logo	Approval	Additional Approval Text	Certificate name
	ABS American Bureau of Shipping	EN 60947	20-HG1941090-PDA
	DNV GL Det Norske Veritas, Germanischer Lloyd	-	TAE00001V2

UL-Approvals

Logo	Approval	Additional Approval Text	Certificate name
	cURus Underwriters Laboratories Inc.	UL 1059	E45172

Counterpart

Compatible products

End plate

Subject to changes. Please also observe the further product documentation!

WAGO Kontakttechnik GmbH & Co. KG
Hansastr. 27
32423 Minden
Phone: +49571 887-0 | Fax: +49571 887-169
Email: info.de@wago.com | Web: www.wago.com

Do you have any questions about our products?
We are always happy to take your call at +49 (571) 887-44222.

	Item no.: 2002-2295 Separator plate; oversized upper deck; snap-fit type; 2 mm thick; gray	www.wago.com/2002-2295
	Item no.: 2002-2296 Separator plate; oversized upper deck; snap-fit type; 2 mm thick; orange	www.wago.com/2002-2296
Jumper		
	Item no.: 210-103 Wire commoning chain; insulated; 50 connections; black	www.wago.com/210-103
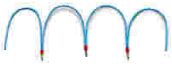	**Item no.: 210-123** Wire commoning chain; insulated; 50 connections	www.wago.com/210-123
ferrule		
	Item no.: 216-241 Ferrule; Sleeve for 0.5 mm² / 20 AWG; insulated; electro-tin plated; electrolytic copper; gastight crimped; acc. to DIN 46228, Part 4/09.90; white	www.wago.com/216-241
	Item no.: 216-242 Ferrule; Sleeve for 0.75 mm² / 18 AWG; insulated; electro-tin plated; electrolytic copper; gastight crimped; acc. to DIN 46228, Part 4/09.90; gray	www.wago.com/216-242
	Item no.: 216-243 Ferrule; Sleeve for 1 mm² / AWG 18; insulated; electro-tin plated; electrolytic copper; gastight crimped; acc. to DIN 46228, Part 4/09.90; red	www.wago.com/216-243
	Item no.: 216-244 Ferrule; Sleeve for 1.5 mm² / AWG 16; insulated; electro-tin plated; electrolytic copper; gastight crimped; acc. to DIN 46228, Part 4/09.90; black	www.wago.com/216-244
	Item no.: 216-246 Ferrule; Sleeve for 2.5 mm² / AWG 14; insulated; electro-tin plated; electrolytic copper; gastight crimped; acc. to DIN 46228, Part 4/09.90; blue	www.wago.com/216-246
	Item no.: 216-262 Ferrule; Sleeve for 0.75 mm² / 18 AWG; insulated; electro-tin plated; electrolytic copper; gastight crimped; acc. to DIN 46228, Part 4/09.90; gray	www.wago.com/216-262
	Item no.: 216-263 Ferrule; Sleeve for 1 mm² / AWG 18; insulated; electro-tin plated; electrolytic copper; gastight crimped; acc. to DIN 46228, Part 4/09.90; red	www.wago.com/216-263
	Item no.: 216-264 Ferrule; Sleeve for 1.5 mm² / AWG 16; insulated; electro-tin plated; electrolytic copper; gastight crimped; acc. to DIN 46228, Part 4/09.90; black	www.wago.com/216-264
	Item no.: 216-266 Ferrule; Sleeve for 2.5 mm² / AWG 14; insulated; electro-tin plated; electrolytic copper; gastight crimped; acc. to DIN 46228, Part 4/09.90; blue	www.wago.com/216-266
Insulation stop		
	Item no.: 2002-171 Insulation stop; 0.25 - 0.5 mm²; 5 pieces/strip; light gray	www.wago.com/2002-171
	Item no.: 2002-172 Insulation stop; 0.75 - 1 mm²; 5 pieces/strip; dark gray	www.wago.com/2002-172
Marking accessories		

Subject to changes. Please also observe the further product documentation!

WAGO Kontakttechnik GmbH & Co. KG
Hansastr. 27
32423 Minden
Phone: +49571 887-0 | Fax: +49571 887-169
Email: info.de@wago.com | Web: www.wago.com

Do you have any questions about our products?
We are always happy to take your call at +49 (571) 887-44222.

	Item no.: 2002-121 Adaptor	www.wago.com/2002-121
	Item no.: 2009-110 Marking strips; on reel; not stretchable; plain; snap-on type; white	www.wago.com/2009-110
	Item no.: 2009-115 WMB-Inline; for Smart Printer; 1500 pieces on roll; stretchable 5 - 5.2 mm; plain; snap-on type; white	www.wago.com/2009-115
	Item no.: 2009-115/000-002 WMB-Inline; for Smart Printer; 1500 pieces on roll; stretchable 5 - 5.2 mm; plain; snap-on type; yellow	www.wago.com/2009-115/000-002
	Item no.: 2009-115/000-005 WMB-Inline; for Smart Printer; 1500 pieces on roll; stretchable 5 - 5.2 mm; plain; snap-on type; white	www.wago.com/2009-115/000-005
	Item no.: 2009-115/000-006 WMB-Inline; for Smart Printer; 1500 pieces on roll; stretchable 5 - 5.2 mm; plain; snap-on type; white	www.wago.com/2009-115/000-006
	Item no.: 2009-115/000-007 WMB-Inline; for Smart Printer; 1500 pieces on roll; stretchable 5 - 5.2 mm; plain; snap-on type; gray	www.wago.com/2009-115/000-007
	Item no.: 2009-115/000-012 WMB-Inline; for Smart Printer; 1500 pieces on roll; stretchable 5 - 5.2 mm; plain; snap-on type; white	www.wago.com/2009-115/000-012
	Item no.: 2009-115/000-017 WMB-Inline; for Smart Printer; 1500 pieces on roll; stretchable 5 - 5.2 mm; plain; snap-on type; white	www.wago.com/2009-115/000-017
	Item no.: 2009-115/000-023 WMB-Inline; for Smart Printer; 1500 pieces on roll; stretchable 5 - 5.2 mm; plain; snap-on type; green	www.wago.com/2009-115/000-023
	Item no.: 2009-115/000-024 WMB-Inline; for Smart Printer; 1500 pieces on roll; stretchable 5 - 5.2 mm; plain; snap-on type; white	www.wago.com/2009-115/000-024
	Item no.: 2009-145 Mini-WSB Inline; for Smart Printer; 1700 pieces on roll; stretchable 5 - 5.2 mm; plain; snap-on type; white	www.wago.com/2009-145
	Item no.: 2009-145/000-002 Mini-WSB Inline; for Smart Printer; 1700 pieces on roll; stretchable 5 - 5.2 mm; plain; snap-on type; white	www.wago.com/2009-145/000-002
	Item no.: 2009-145/000-005 Mini-WSB Inline; for Smart Printer; 1700 pieces on roll; stretchable 5 - 5.2 mm; plain; snap-on type; red	www.wago.com/2009-145/000-005
	Item no.: 2009-145/000-006	

Subject to changes. Please also observe the further product documentation!

WAGO Kontakttechnik GmbH & Co. KG
Hansastr. 27
32423 Minden
Phone: +49571 887-0 | Fax: +49571 887-169
Email: info.de@wago.com | Web: www.wago.com

Do you have any questions about our products?
We are always happy to take your call at +49 (571) 887-44222.

	Mini-WSB Inline; for Smart Printer; 1700 pieces on roll; stretchable 5 - 5.2 mm; plain; snap-on type; blue	www.wago.com/2009-145/000-006
	Item no.: 2009-145/000-007 Mini-WSB Inline; for Smart Printer; 1700 pieces on roll; stretchable 5 - 5.2 mm; plain; snap-on type; white	www.wago.com/2009-145/000-007
	Item no.: 2009-145/000-012 Mini-WSB Inline; for Smart Printer; 1700 pieces on roll; stretchable 5 - 5.2 mm; plain; snap-on type; orange	www.wago.com/2009-145/000-012
	Item no.: 2009-145/000-023 Mini-WSB Inline; for Smart Printer; 1700 pieces on roll; stretchable 5 - 5.2 mm; plain; snap-on type; green	www.wago.com/2009-145/000-023
	Item no.: 2009-145/000-024 Mini-WSB Inline; for Smart Printer; 1700 pieces on roll; stretchable 5 - 5.2 mm; plain; snap-on type; violet	www.wago.com/2009-145/000-024
	Item no.: 2009-191 Group marker carrier	www.wago.com/2009-191
	Item no.: 2009-192 Group marker carrier	www.wago.com/2009-192
	Item no.: 2009-193 Group marker carrier	www.wago.com/2009-193
	Item no.: 2009-198 Adaptor	www.wago.com/2009-198
	Item no.: 248-501 Miniature WSB Quick marking system; plain; Marker width 5 mm; 10 strips with 10 markers per card	www.wago.com/248-501
	Item no.: 248-501/000-002 Mini-WSB marking card; as card; not stretchable; plain; snap-on type; yellow	www.wago.com/248-501/000-002
	Item no.: 248-501/000-005 Mini-WSB marking card; as card; not stretchable; plain; snap-on type; red	www.wago.com/248-501/000-005
	Item no.: 248-501/000-006 Mini-WSB marking card; as card; not stretchable; plain; snap-on type; blue	www.wago.com/248-501/000-006
	Item no.: 248-501/000-007 Mini-WSB marking card; as card; not stretchable; plain; snap-on type; gray	www.wago.com/248-501/000-007
	Item no.: 248-501/000-012 Mini-WSB marking card; as card; not stretchable; plain; snap-on type; orange	www.wago.com/248-501/000-012

Subject to changes. Please also observe the further product documentation!

WAGO Kontakttechnik GmbH & Co. KG
Hansastr. 27
32423 Minden
Phone: +49571 887-0 | Fax: +49571 887-169
Email: info.de@wago.com | Web: www.wago.com

Do you have any questions about our products?
We are always happy to take your call at +49 (571) 887-44222.

	Item no.: 248-501/000-017 Mini-WSB marking card; as card; not stretchable; plain; snap-on type; light green	www.wago.com/248-501/000-017
	Item no.: 248-501/000-023 Mini-WSB marking card; as card; not stretchable; plain; snap-on type; green	www.wago.com/248-501/000-023
	Item no.: 248-501/000-024 Mini-WSB marking card; as card; not stretchable; plain; snap-on type; violet	www.wago.com/248-501/000-024
	Item no.: 793-501 WMB marking card; as card; not stretchable; plain; snap-on type; white	www.wago.com/793-501
	Item no.: 793-501/000-002 WMB marking card; as card; not stretchable; plain; snap-on type; yellow	www.wago.com/793-501/000-002
	Item no.: 793-501/000-005 WMB marking card; as card; not stretchable; plain; snap-on type; red	www.wago.com/793-501/000-005
	Item no.: 793-501/000-006 WMB marking card; as card; not stretchable; plain; snap-on type; blue	www.wago.com/793-501/000-006
	Item no.: 793-501/000-007 WMB marking card; as card; not stretchable; plain; snap-on type; gray	www.wago.com/793-501/000-007
	Item no.: 793-501/000-012 WMB marking card; as card; not stretchable; plain; snap-on type; orange	www.wago.com/793-501/000-012
	Item no.: 793-501/000-017 WMB marking card; as card; not stretchable; plain; snap-on type; light green	www.wago.com/793-501/000-017
	Item no.: 793-501/000-023 WMB marking card; as card; not stretchable; plain; snap-on type; green	www.wago.com/793-501/000-023
	Item no.: 793-501/000-024 WMB marking card; as card; not stretchable; plain; snap-on type; violet	www.wago.com/793-501/000-024
	Item no.: 793-5501 WMB marking card; as card; for terminal block width 5 - 17.5 mm; stretchable 5 - 5.2 mm; plain; snap-on type; white	www.wago.com/793-5501
	Item no.: 793-5501/000-002	

Subject to changes. Please also observe the further product documentation!

WAGO Kontakttechnik GmbH & Co. KG
Hansastr. 27
32423 Minden
Phone: +49571 887-0 | Fax: +49571 887-169
Email: info.de@wago.com | Web: www.wago.com

Do you have any questions about our products?
We are always happy to take your call at +49 (571) 887-44222.

	WMB marking card; as card; for terminal block width 5 - 17.5 mm; stretchable 5 - 5.2 mm; plain; snap-on type; yellow	www.wago.com/793-5501/000-002
	Item no.: 793-5501/000-005 WMB marking card; as card; for terminal block width 5 - 17.5 mm; stretchable 5 - 5.2 mm; plain; snap-on type; red	www.wago.com/793-5501/000-005
	Item no.: 793-5501/000-006 WMB marking card; as card; for terminal block width 5 - 17.5 mm; stretchable 5 - 5.2 mm; plain; snap-on type; blue	www.wago.com/793-5501/000-006
	Item no.: 793-5501/000-007 WMB marking card; as card; for terminal block width 5 - 17.5 mm; stretchable 5 - 5.2 mm; plain; snap-on type; gray	www.wago.com/793-5501/000-007
	Item no.: 793-5501/000-012 WMB marking card; as card; for terminal block width 5 - 17.5 mm; stretchable 5 - 5.2 mm; plain; snap-on type; orange	www.wago.com/793-5501/000-012
	Item no.: 793-5501/000-014 WMB marking card; as card; for terminal block width 5 - 17.5 mm; stretchable 5 - 5.2 mm; plain; snap-on type; brown	www.wago.com/793-5501/000-014
	Item no.: 793-5501/000-017 WMB marking card; as card; for terminal block width 5 - 17.5 mm; stretchable 5 - 5.2 mm; plain; snap-on type; green	www.wago.com/793-5501/000-017
	Item no.: 793-5501/000-023 WMB marking card; as card; for terminal block width 5 - 17.5 mm; stretchable 5 - 5.2 mm; plain; snap-on type; light green	www.wago.com/793-5501/000-023
	Item no.: 793-5501/000-024 WMB marking card; as card; for terminal block width 5 - 17.5 mm; stretchable 5 - 5.2 mm; plain; snap-on type; violet	www.wago.com/793-5501/000-024
Carrier rail		
	Item no.: 210-112 Steel carrier rail; 35 x 7.5 mm; 1 mm thick; 2 m long; slotted; according to EN 60715; "Hole width 25 mm	www.wago.com/210-112
	Item no.: 210-113 Steel carrier rail; 35 x 7.5 mm; 1 mm thick; 2 m long; unslotted; according to EN 60715	www.wago.com/210-113
	Item no.: 210-114 Steel carrier rail; 35 x 15 mm; 1.5 mm thick; 2 m long; unslotted; similar to EN 60715	www.wago.com/210-114
	Item no.: 210-115 Steel carrier rail; 35 x 7.5 mm; 1 mm thick; 2 m long; slotted; according to EN 60715; "Hole width 18 mm	www.wago.com/210-115
	Item no.: 210-118 Steel carrier rail; 35 x 15 mm; 2.3 mm thick; 2 m long; unslotted; according to EN 60715	www.wago.com/210-118

Subject to changes. Please also observe the further product documentation!

WAGO Kontakttechnik GmbH & Co. KG
Hansastr. 27
32423 Minden
Phone: +49571 887-0 | Fax: +49571 887-169
Email: info.de@wago.com | Web: www.wago.com

Do you have any questions about our products?
We are always happy to take your call at +49 (571) 887-44222.

	Item no.: 210-196 Aluminum carrier rail; 35 x 8.2 mm; 1.6 mm thick; 2 m long; unslotted; similar to EN 60715; silver-colored	www.wago.com/210-196
	Item no.: 210-197 Steel carrier rail; 35 x 15 mm; 1.5 mm thick; 2 m long; slotted; similar to EN 60715	www.wago.com/210-197
	Item no.: 210-198 Copper carrier rail; 35 x 15 mm; 2.3 mm thick; 2 m long; unslotted; according to EN 60715; copper-colored	www.wago.com/210-198
	Item no.: 210-504 Steel carrier rail; 35 x 7.5 mm; 1 mm thick; 2 m long; slotted; galvanized; according to EN 60715	www.wago.com/210-504
	Item no.: 210-505 Steel carrier rail; 35 x 7.5 mm; 1 mm thick; 2 m long; unslotted; galvanized; according to EN 60715	www.wago.com/210-505
	Item no.: 210-506 Steel carrier rail; 35 x 15 mm; 1.5 mm thick; 2 m long; unslotted; galvanized; similar to EN 60715	www.wago.com/210-506
	Item no.: 210-508 Steel carrier rail; 35 x 15 mm; 1.5 mm thick; 2 m long; slotted; galvanized; similar to EN 60715	www.wago.com/210-508
Protective Warning Marker		
	Item no.: 2002-115 Protective warning marker; with high-voltage symbol, black; for 5 terminal blocks; yellow	www.wago.com/2002-115
Push-In type wire jumper		
	Item no.: 2009-412 Push-in type wire jumper; insulated; wire length 60 mm; Conductor cross section 1.5 mm²; suitable for 2001, 2002, 2003 and 2022 Series rail-mounted terminal blocks; black	www.wago.com/2009-412
	Item no.: 2009-414 Push-in type wire jumper; insulated; wire length 110 mm; Conductor cross section 1.5 mm²; suitable for 2001, 2002, 2003 and 2022 Series rail-mounted terminal blocks; black	www.wago.com/2009-414
	Item no.: 2009-414/000-005 Push-in type wire jumper; insulated; wire length 110 mm; Conductor cross section 1.5 mm²; suitable for 2001, 2002, 2003 and 2022 Series rail-mounted terminal blocks; red	www.wago.com/2009-414/000-005
	Item no.: 2009-414/000-006 Push-in type wire jumper; insulated; wire length 110 mm; Conductor cross section 1.5 mm²; suitable for 2001, 2002, 2003 and 2022 Series rail-mounted terminal blocks; blue	www.wago.com/2009-414/000-006
	Item no.: 2009-416 Push-in type wire jumper; insulated; wire length 250 mm; Conductor cross section 1.5 mm²; suitable for 2001, 2002, 2003 and 2022 Series rail-mounted terminal blocks; black	www.wago.com/2009-416
Test Accessories		
	Item no.: 2002-611 TOPJOB®S L-type test plug module; modular; 1-pole; 2,50 mm²; gray	www.wago.com/2002-611
	Item no.: 2002-649 TOPJOB®S L-type spacer module; modular; e.g., for bridging commoned terminal blocks; gray	www.wago.com/2002-649
tools		

Subject to changes. Please also observe the further product documentation!

WAGO Kontakttechnik GmbH & Co. KG
Hansastr. 27
32423 Minden
Phone: +49571 887-0 | Fax: +49571 887-169
Email: info.de@wago.com | Web: www.wago.com

Do you have any questions about our products?
We are always happy to take your call at +49 (571) 887-44222.

Item no.: 210-658 Operating tool; Blade: 3.5 x 0.5 mm; with a partially insulated shaft; angled; short	www.wago.com/210-658
Item no.: 210-720 Operating tool; Blade: 3.5 x 0.5 mm; with a partially insulated shaft	www.wago.com/210-720

Downloads

Documentation

Additional Information

Technical explanations	Apr 3, 2019	pdf 2.1 MB	Download

CAD/CAE-Data

CAE data

EPLAN Data Portal 2002-2201/097-000	URL	Download
WSCAD Universe 2002-2201/097-000	URL	Download

Installation Notes

Inserting a conductor

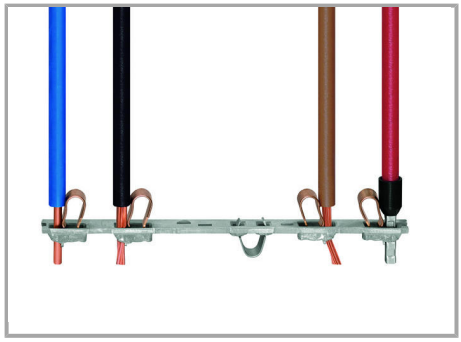

All conductor types at a glance

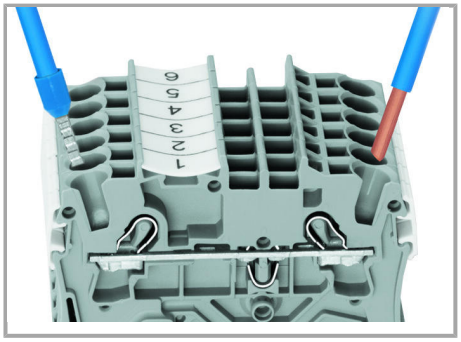

Terminating solid and ferruled conductors via push-in connection.

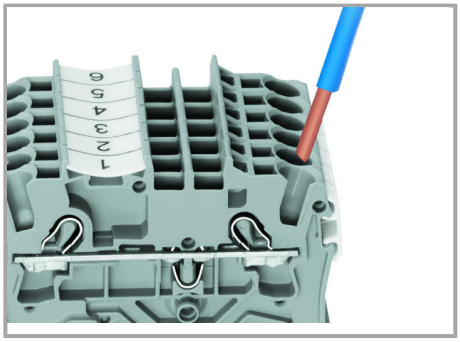

Inserting conductors via push-in termination.

Solid conductors with cross-sections from either one size above, or up to two sizes below, the rated cross-section can be simply pushed in – no tools needed.

Subject to changes. Please also observe the further product documentation!

WAGO Kontakttechnik GmbH & Co. KG
Hansastr. 27
32423 Minden
Phone: +49571 887-0 | Fax: +49571 887-169
Email: info.de@wago.com | Web: www.wago.com

Do you have any questions about our products?
We are always happy to take your call at +49 (571) 887-44222.

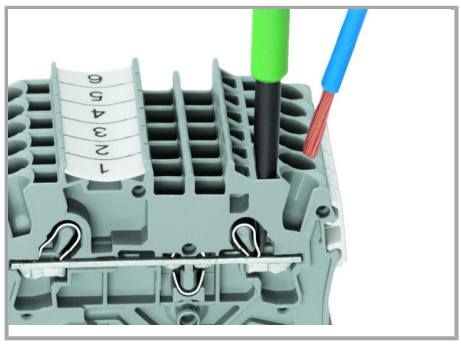

Inserting a conductor via operating tool.

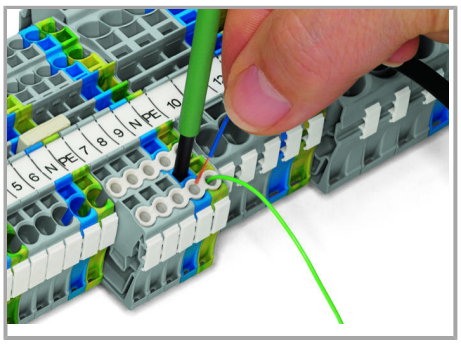

Conductor termination – Insulation stop.

Connecting fine-stranded conductors without ferrules, or small cross-sectional conductors that cannot be pushed in, is performed similarly to the original CAGE CLAMP® – just use an operating tool.

The smart feature:

To open the clamp, the operating tool is inserted vertically. The conductor entry is less than 15 degrees for easier wiring.

Product family

TOPJOB® S

TOPJOB® S: In various industrial applications and modern building installations, WAGO's wide and versatile range of rail-mount terminal blocks provides more than just reliable electrical connections.

Learn more about the product family.

Show all products from the family

Subject to changes. Please also observe the further product documentation!

WAGO Kontakttechnik GmbH & Co. KG
Hansastr. 27
32423 Minden
Phone: +49571 887-0 | Fax: +49571 887-169
Email: info.de@wago.com | Web: www.wago.com

Do you have any questions about our products?
We are always happy to take your call at +49 (571) 887-44222.