Coaxial contact - HC-M-04-BU-KOAX-50 - 1676802

Please be informed that the data shown in this PDF Document is generated from our Online Catalog. Please find the complete data in the user's documentation. Our General Terms of Use for Downloads are valid
(http://phoenixcontact.com/download)

Coaxial contact, contact diameter: 4.8 mm, turned, Socket, contact material: Copper alloy, contact surface: gold-plated, connection cross section: 0.14 mm² ... 2.5 mm², AWG 26 ... 14, Wave impedance: 50 Ω

RoHS COMPLETE line

Key Commercial Data

Packing unit	1 pc
Minimum order quantity	10 pc
GTIN	4 017918 150556
GTIN	4017918150556
Weight per Piece (excluding packing)	2.000 g
Custom tariff number	85366910
Country of origin	Hungary

Technical data

Electrical characteristics

Rated voltage (III/3)	48 V
Rated current	1.5 A
Wave impedance	50 Ω

Ambient conditions

Ambient temperature (operation)	-40 °C ... 125 °C

Mechanical characteristics

Conductor cross section	0.14 mm² ... 2.5 mm²
Connection cross section AWG	26 ... 14
Stripping length of the individual wire	2 mm

Coaxial contact - HC-M-04-BU-KOAX-50 - 1676802

Technical data

Mechanical characteristics

Contact diameter	4.8 mm
Insertion/withdrawal cycles	≥ 500

General

Note	Cables that can be used for the coaxial contact: RG174/U, RG188A/U, RG316/U
	Coaxial contact for module HC-M-04-KT-M
Type	Individual male contact
Series	HC-M-04-KOAX
Connection method	Soldering and crimp connection (Solder connection (wire) / crimp connection (braided shield))
Connection in acc. with standard	IEC / EN
Contact type	turned

Material data

Contact material	Copper alloy
Contact surface material	gold-plated

Standards and Regulations

Connection in acc. with standard	UL

Environmental Product Compliance

China RoHS	Environmentally friendly use period: unlimited = EFUP-e
	No hazardous substances above threshold values

Drawings

Coaxial contact - HC-M-04-BU-KOAX-50 - 1676802

Schematic diagram

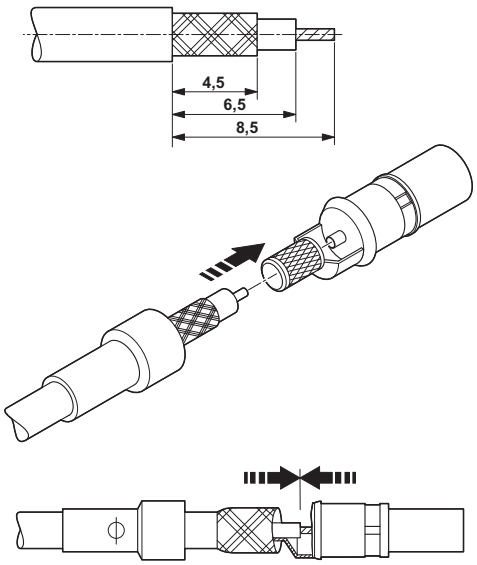

Assembly instruction:
RG cables 174/U; 188A/U; 316/U; 179B/U; 187A/U. Prepare the cable (see diagram) and slide the sleeve over the cable. Then solder the wire to the coaxial contact and lay the braided shield over the ridges of the contact. Slide the sleeve over the braided shield and crimp the shield/cable along the narrow contact collar.

Classifications

eCl@ss

eCl@ss 10.0.1	27440204
eCl@ss 11.0	27440204
eCl@ss 4.0	27140800
eCl@ss 4.1	27140800
eCl@ss 5.0	27143400
eCl@ss 5.1	27261200
eCl@ss 6.0	27261200
eCl@ss 7.0	27440204
eCl@ss 9.0	27440204

ETIM

ETIM 2.0	EC000796
ETIM 3.0	EC000796
ETIM 4.0	EC000796
ETIM 6.0	EC000796
ETIM 7.0	EC000796

Coaxial contact - HC-M-04-BU-KOAX-50 - 1676802

Classifications

UNSPSC

UNSPSC 6.01	30211923
UNSPSC 7.0901	39121522
UNSPSC 11	39121522
UNSPSC 12.01	39121522
UNSPSC 13.2	39121522
UNSPSC 18.0	39121522
UNSPSC 19.0	39121522
UNSPSC 20.0	39121522
UNSPSC 21.0	39121522

Approvals

Approvals

Approvals

UL Recognized / EAC / EAC

Ex Approvals

Approval details

UL Recognized		http://database.ul.com/cgi-bin/XYV/template/LISEXT/1FRAME/index.htm	FILE E 118976

Nominal voltage UN	600 V

EAC		RU C-DE.AI30.B.01102

EAC		RU C-DE.BL08.B.00511

Phoenix Contact 2021 © - all rights reserved
http://www.phoenixcontact.com