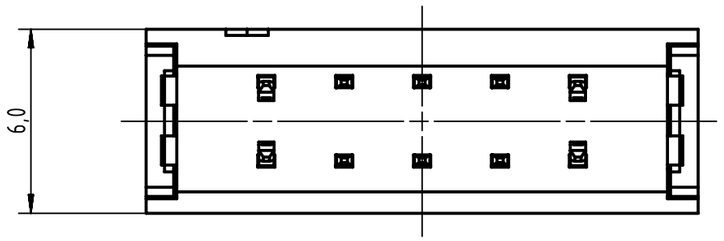

pre-assembled

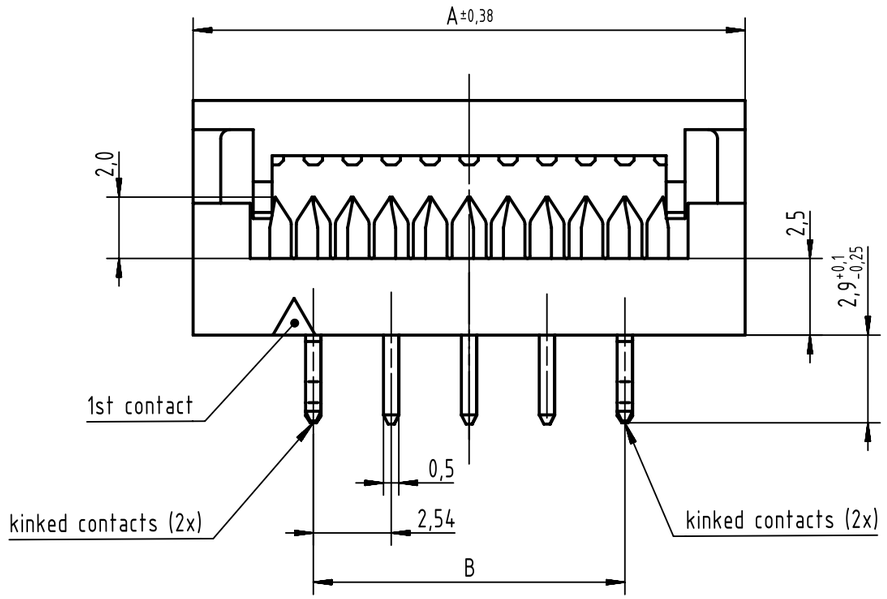

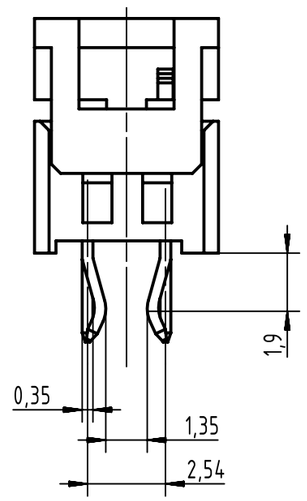

PCB layout, component side

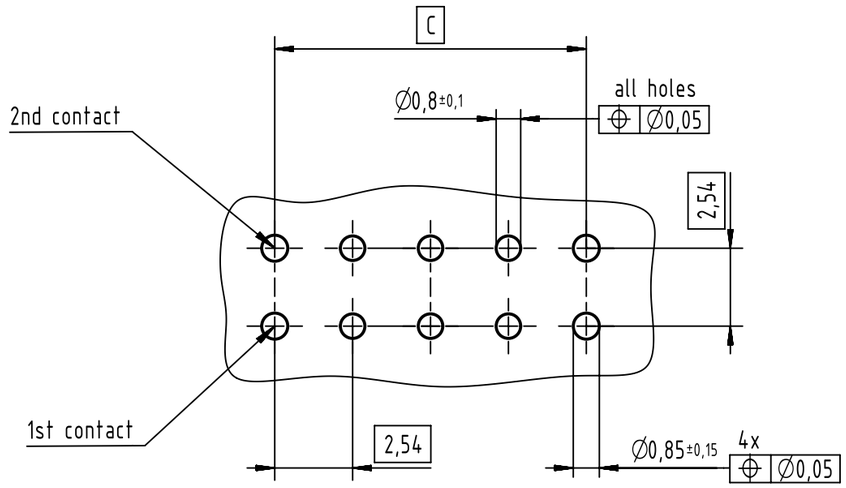

assembled

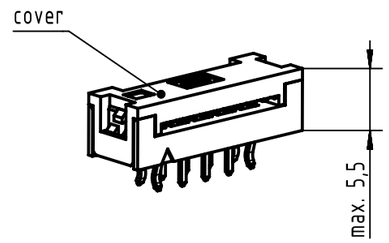

number of contacts	part number	dim. A	dim. B	dim. C	packing quantity
4	0918 104 942X	10,38	2,54	2,54	100pcs/packing
6	0918 106 942X	12,92	2 x 2,54 = 5,08	2 x 2,54 = 5,08	
8	0918 108 942X	15,46	3 x 2,54 = 7,62	3 x 2,54 = 7,62	
10	0918 110 942X	18,00	4 x 2,54 = 10,16	4 x 2,54 = 10,16	
14	0918 114 942X	23,08	6 x 2,54 = 15,24	6 x 2,54 = 15,24	
16	0918 116 942X	25,62	7 x 2,54 = 17,78	7 x 2,54 = 17,78	
20	0918 120 942X	30,70	9 x 2,54 = 22,86	9 x 2,54 = 22,86	
24	0918 124 942X	35,78	11 x 2,54 = 27,94	11 x 2,54 = 27,94	
26	0918 126 942X	38,32	12 x 2,54 = 30,48	12 x 2,54 = 30,48	
30	0918 130 942X	43,40	14 x 2,54 = 35,56	14 x 2,54 = 35,56	
34	0918 134 942X	48,48	16 x 2,54 = 40,64	16 x 2,54 = 40,64	
50	0918 150 942X	68,80	24 x 2,54 = 60,96	24 x 2,54 = 60,96	50pcs/packing
64	0918 164 942X	86,58	31 x 2,54 = 78,74	31 x 2,54 = 78,74	

numbering system:

0918 1XX 942X

- 2: pre-assembled cover
- 4: non-assembled cover
- number of contacts

further information see: DS 09185100600

All Dimensions in mm
Original Size DIN A3

Scale 5:1

Free size tol.

Ref.
Sub. TB 09181XX942X / 500000097498 / 2015-11-19

All rights reserved

Department EC PD - DE

HARTING Electronics GmbH
D-32339 Espelkamp

Created by	Inspected by	Standardisation	Date	State
STORCK	LEHNERT	HOFFMANN	2016-04-04	Final Release

Title SEK PCB 2rows kinked straight

Doc-Key / ECM-Nr.
100540140/UGD/000/D
500000102447

Type TB | Number 09181XX942X | Rev. D | Page 1/1

A3