Stand, with tube 250mm, metal

Part no.	**SL-F250M**
Article no.	**268925**
Catalog No.	**SL-F250M**

Delivery program

Product range			SL signal towers
Single unit/Complete unit			Stand-alone device
Length		mm	250
Material			Metal
Connection to SmartWire-DT			no

Design verification as per IEC/EN 61439

Technical data for design verification			
Operating ambient temperature min.		°C	-25
Operating ambient temperature max.		°C	55

Technical data ETIM 6.0

Low-voltage industrial components (EG000017) / Stand for signal tower with tube (EC001259)			
Electric engineering, automation, process control engineering / Low-voltage switch technology / Command and alarm device / Signal column element, foot with pipe (ecl@ss8.1-27-37-12-34 [AKF052011])			
Colour			Black
Tube length		mm	250
Material			Metal

Approvals

Product Standards			IEC/EN 60947-5; UL 508; CSA-C22.2 No. 14-05; CSA-C22.2 No. 94-91; CE marking
UL File No.			E29184
UL Category Control No.			NKCR
CSA File No.			012528
CSA Class No.			3211-03
North America Certification			UL listed, CSA certified

Dimensions

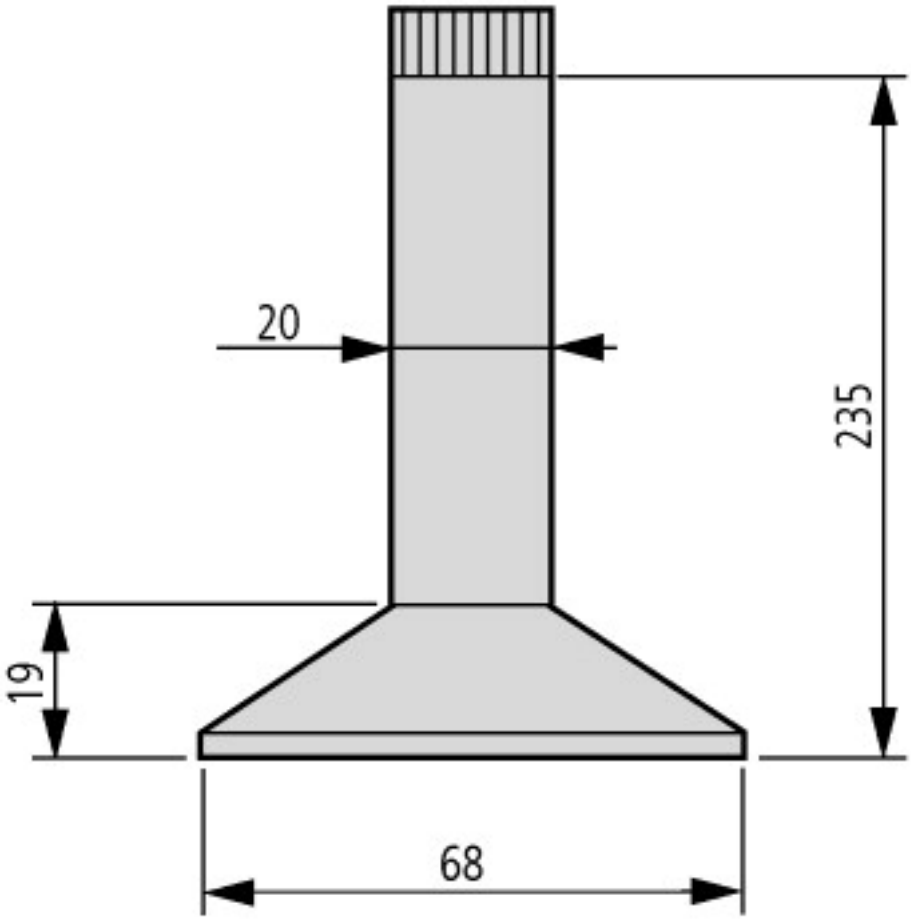

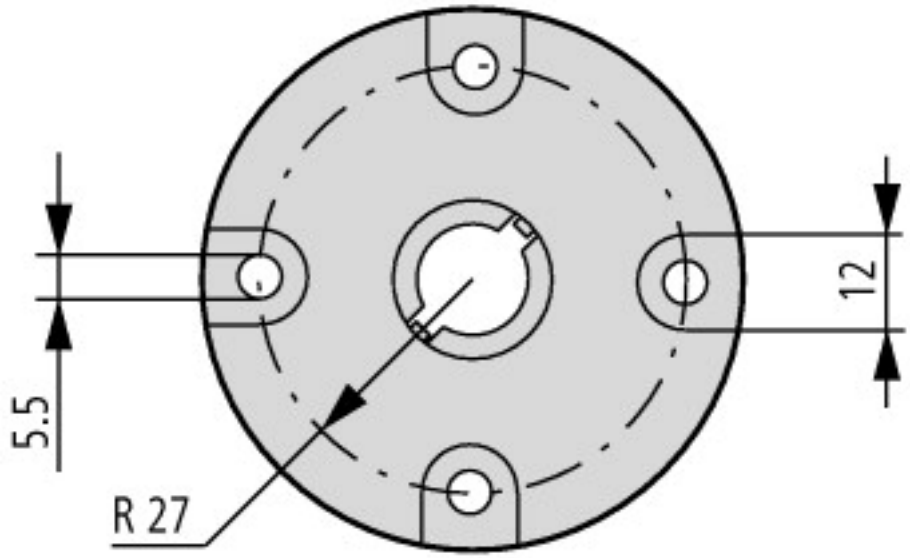

Additional product information (links)

IL04716024Z (AWA1160-1685) Pillar lamps	
IL04716024Z (AWA1160-1685) Pillar lamps	ftp://ftp.moeller.net/DOCUMENTATION/AWA_INSTRUCTIONS/IL04716024Z2011_02.pdf

© 11/2016 by Eaton Industries GmbH