Similar to illustration

**Circuit-breaker, 3p, 80A**

**Part no.** **NZMN2-S80-CNA**
**Article no.** **269258**

Powering Business Worldwide

## Delivery program

| | | | |
|---|---|---|---|
| Product range | | | Circuit-breaker |
| Protective function | | | Short-circuit protection |
| Standard/Approval | | | UL/CSA, IEC |
| Installation type | | | Fixed |
| Release system | | | Thermomagnetic release |
| Description | | | Switches conform to UL/CSA as well as the IEC regulations. IEC switching performance values are contained on the rating plate.<br>Motor protection in conjunction with contactor and overload relay<br>With short-circuit release<br>Without overload release Ir |
| Number of poles | | | 3 pole |
| Standard equipment | | | Screw connection |
| Rated current = rated uninterrupted current | $I_n = I_u$ | A | 80 |
| **Setting range** | | | |
| Short-circuit releases | | | |
| Non-delayed | $I_i = I_n$ x … | | 8 - 14 |

## Technical data

### General

| | | | |
|---|---|---|---|
| Standards | | | IEC/EN 60947 |
| Protection against direct contact | | | Finger and back of hand proof to VDE 0106 Part 100 |
| Climatic proofing | | | Damp heat, constant, to IEC 60068-2-78<br>Damp heat, cyclic, to IEC 60068-2-30 |
| Ambient temperature | | | |
| Ambient temperature, storage | | °C | - 40 - + 70 |
| Operation | | °C | -25 - +70 |
| Mechanical shock resistance (10 ms half-sinusoidal shock) according to IEC 60068-2-27 | | g | 20 (half-sinusoidal shock 20 ms) |
| Safe isolation to EN 61140 | | | |
| Between auxiliary contacts and main contacts | | V AC | 500 |
| between the auxiliary contacts | | V AC | 300 |
| Weight | | kg | 2.345 |
| Mounting position | | | |
| Mounting position | | | Vertical and 90° in all directions 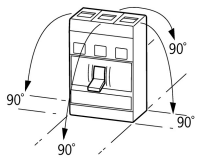  With residual-current release XFI:<br>- NZM1, N1, NZM2, N2: vertical and 90° in all directions<br>with plug-in adapter elements<br>- NZM1, N1, NZM2, N2: vertical, 90° right/left<br>with withdrawable unit:<br>- NZM3, N3: vertical, 90 ° left<br>- NZM4, N4: vertical<br>with remote operator:<br>- NZM2, N(S)2, NZM3, N(S)3, NZM4, N(S)4: vertical and 90° in all directions |
| Direction of incoming supply | | | as required |

| | | | |
|---|---|---|---|
| Degree of protection | | | |
| Device | | | In the operating controls area: IP20 (basic degree of protection) |
| Enclosures | | | With insulating surround: IP40<br>With door coupling rotary handle: IP66 |
| Terminations | | | Tunnel terminal: IP10<br>Phase isolator and strip terminal: IP00 |
| Other technical data (sheet catalogue) | | | Weight<br>Temperature dependency, Derating<br>Effective power loss |

## Circuit-breakers

| | | | |
|---|---|---|---|
| Rated surge voltage invariability | $U_{imp}$ | | |
| Main contacts | | V | 8000 |
| Auxiliary contacts | | V | 6000 |
| Rated operational voltage | $U_e$ | V AC | 690 |
| Rated operational voltage | $U_e$ | V DC | 750 |
| | | | Details apply for 3 pole system protection circuit-breaker with thermomagnetic release NZMN(H)1(2)(3)-A… to 500 A.<br><br>For rated operating voltage switching via 3 contacts:<br><br>DC correction factor for instantaneous release response value: NZM1: 1.25, NZM2: 1.35, NZM3: 1.45<br><br>Set value for $I_i$ at DC = set value $I_i$ AC/correction factor DC<br><br>**Switching of one pole via two series contacts**<br><br>**Switching of one pole via three series contacts** |
| Overvoltage category/pollution degree | | | III/3 |
| Rated insulation voltage | $U_i$ | V | 1000 |
| Use in unearthed supply systems | | V | 690 |

## Switching capacity

| | | | |
|---|---|---|---|
| Rated short-circuit making capacity | $I_{cm}$ | | |
| 240 V | $I_{cm}$ | kA | 187 |
| 400/415 V | $I_{cm}$ | kA | 105 |
| 440 V 50/60 Hz | $I_{cm}$ | kA | 74 |
| 525 V 50/60 Hz | $I_{cm}$ | kA | 53 |
| 690 V 50/60 H | Ic | kA | 40 |
| Rated short-circuit breaking capacity $I_{cn}$ | $I_{cn}$ | | |
| Icu to IEC/EN 60947 test cycle O-t-CO | Icu | kA | |
| 240 V 50/60 Hz | $I_{cu}$ | kA | 85 |
| 400/415 V 50/60 Hz | $I_{cu}$ | kA | 50 |
| 440 V 50/60 Hz | $I_{cu}$ | kA | 35 |
| 525 V 50/60 Hz | $I_{cu}$ | kA | 25 |
| 690 V 50/60 Hz | $I_{cu}$ | kA | 20 |
| 500 V DC | $I_{cu}$ | kA | 30 |
| 750 V DC | $I_{cu}$ | kA | 30 |
| Ics to IEC/EN 60947 test cycle O-t-CO-t-CO | Ics | kA | |
| 240 V 50/60 Hz | $I_{cs}$ | kA | 85 |
| 400/415 V 50/60 Hz | $I_{cs}$ | kA | 50 |
| 440 V 50/60 Hz | $I_{cs}$ | kA | 35 |
| 525 V 50/60 Hz | $I_{cs}$ | kA | 25 |

| | | | |
|---|---|---|---|
| 690 V 50/60 Hz | $I_{cs}$ | kA | 5 |
| Maximum low-voltage h.b.c. fuse | | A gG/gL | 355 |
| | | | Maximum back-up fuse, if the expected short-circuit currents at the installation location exceed the switching capacity of the circuit-breaker. |
| Rated short-time withstand current | | | |
| t = 0.3 s | $I_{cw}$ | kA | 1.9 |
| t = 1 s | $I_{cw}$ | kA | 1.9 |
| Utilization category to IEC/EN 60947-2 | | | A |
| Rated making and breaking capacity | | | |
| Rated operational current | $I_e$ | A | |
| AC-1 | | | |
| 400/415 V 50/60 Hz | $I_e$ | A | 300 |
| 415 V | $I_e$ | A | 300 |
| 690 V 50/60 Hz | $I_e$ | A | 80 |
| AC--3 | | | |
| 400/415 V 50/60 Hz | $I_e$ | A | 80 |
| 690 V 50/60 Hz | $I_e$ | A | 80 |
| DC-1 | | | |
| 500 V DC | $I_e$ | CSA | 80 |
| 750 V DC | $I_e$ | CSA | 80 |
| DC - 3 | | | |
| 500 V DC | $I_e$ | CSA | 80 |
| 750 V DC | $I_e$ | CSA | 80 |
| Lifespan, mechanical(of which max. 50 % trip by shunt/undervoltage release) | Operations | | 20000 |
| Lifespan, electrical | | | |
| AC-1 | | | |
| 400 V 50/60 Hz | Operations | | 10000 |
| 690 V 50/60 Hz | Operations | | 7500 |
| AC--3 | | | |
| 400 V 50/60 Hz | Operations | | 6500 |
| 415 V 50/60 Hz | Operations | | 6500 |
| 690 V 50/60 Hz | Operations | | 5000 |
| DC-1 | | | |
| 500 V DC | | Operations | 7500 |
| 750 V DC | | Operations | 7500 |
| DC - 3 | | | |
| 500 V DC | Operations | | 3000 |
| 750 V DC | Operations | | 3000 |
| Max. operating frequency | | Ops/h | 120 |
| Total downtime in a short-circuit | | ms | < 10 |

## Terminal capacity

| | | | |
|---|---|---|---|
| Standard equipment | | | Screw connection |
| Round copper conductor | | | |
| Box terminal | | | |
| Solid | | $mm^2$ | 1 x (12 … 6) |
| Stranded | | $mm^2$ | 1 x (4 … 350) |
| Tunnel terminal | | | |
| Solid | | $mm^2$ | 1 x 16 |
| Stranded | | $mm^2$ | |
| Stranded | | $mm^2$ | 1 x (4 … 350) |
| Bolt terminal and rear-side connection | | | |
| Direct on the switch | | | |
| Solid | | $mm^2$ | 1 x (11 … 6) |
| Stranded | | $mm^2$ | 1 x (4 … 3/0) |

| | | | |
|---|---|---|---|
| Al conductors, Cu cable | | | |
| | | | |
| Solid | | $mm^2$ | 1 x 16 |
| Bolt terminal and rear-side connection | | | |
| Flat copper strip, with holes | min. | mm | 2 x 16 x 0.8 |
| Flat copper strip, with holes | max. | mm | 10 x 16 x 0.8 |
| Cu strip (number of segments x width x segment thickness) | | | |
| Box terminal | | | |
| | min. | mm | 2 x 9 x 0.8 |
| | max. | mm | 10 x 16 x 0.8 |
| Bolt terminal and rear-side connection | | | |
| Flat copper strip, with holes | min. | mm | 2 x 16 x 0.8 |
| Flat copper strip, with holes | max. | mm | 10 x 16 x 0.8 |
| Copper busbar (width x thickness) | mm | | |
| Bolt terminal and rear-side connection | | | |
| Screw connection | | | M8 |
| Direct on the switch | | | |
| | min. | mm | 16 x 5 |
| | max. | mm | 20 x 5 |
| Control cables | | | |
| | | $mm^2$ | 1 x (18 … 14)<br>2 x (18 … 16) |

## Design verification as per IEC/EN 61439

| | | | |
|---|---|---|---|
| Technical data for design verification | | | |
| Rated operational current for specified heat dissipation | $I_n$ | A | 80 |
| Equipment heat dissipation, current-dependent | $P_{vid}$ | W | 6.09 |
| Operating ambient temperature min. | | °C | -25 |
| Operating ambient temperature max. | | °C | 70 |
| IEC/EN 61439 design verification | | | |
| 10.2 Strength of materials and parts | | | |
| 10.2.2 Corrosion resistance | | | Meets the product standard's requirements. |
| 10.2.3.1 Verification of thermal stability of enclosures | | | Meets the product standard's requirements. |
| 10.2.3.2 Verification of resistance of insulating materials to normal heat | | | Meets the product standard's requirements. |
| 10.2.3.3 Verification of resistance of insulating materials to abnormal heat and fire due to internal electric effects | | | Meets the product standard's requirements. |
| 10.2.4 Resistance to ultra-violet (UV) radiation | | | Meets the product standard's requirements. |
| 10.2.5 Lifting | | | Does not apply, since the entire switchgear needs to be evaluated. |
| 10.2.6 Mechanical impact | | | Does not apply, since the entire switchgear needs to be evaluated. |
| 10.2.7 Inscriptions | | | Meets the product standard's requirements. |
| 10.3 Degree of protection of ASSEMBLIES | | | Does not apply, since the entire switchgear needs to be evaluated. |
| 10.4 Clearances and creepage distances | | | Meets the product standard's requirements. |
| 10.5 Protection against electric shock | | | Does not apply, since the entire switchgear needs to be evaluated. |
| 10.6 Incorporation of switching devices and components | | | Does not apply, since the entire switchgear needs to be evaluated. |
| 10.7 Internal electrical circuits and connections | | | Is the panel builder's responsibility. |
| 10.8 Connections for external conductors | | | Is the panel builder's responsibility. |
| 10.9 Insulation properties | | | |
| 10.9.2 Power-frequency electric strength | | | Is the panel builder's responsibility. |
| 10.9.3 Impulse withstand voltage | | | Is the panel builder's responsibility. |
| 10.9.4 Testing of enclosures made of insulating material | | | Is the panel builder's responsibility. |
| 10.10 Temperature rise | | | The panel builder is responsible for the temperature rise calculation. Eaton will provide heat dissipation data for the devices. |
| 10.11 Short-circuit rating | | | Is the panel builder's responsibility. The specifications for the switchgear must be observed. |
| 10.12 Electromagnetic compatibility | | | Is the panel builder's responsibility. The specifications for the switchgear must be observed. |

| | | | |
|---|---|---|---|
| 10.13 Mechanical function | | | The device meets the requirements, provided the information in the instruction leaflet (IL) is observed. |

## Technical data ETIM 6.0

Low-voltage industrial components (EG000017) / Motor protection circuit-breaker (EC000074)

Electric engineering, automation, process control engineering / Low-voltage switch technology / Circuit breaker (LV < 1 kV) / Motor protection circuit-breaker (ecl@ss8.1-27-37-04-01 [AGZ529013])

| | | | |
|---|---|---|---|
| Overload release current setting | | A | 0 - 0 |
| Adjustment range undelayed short-circuit release | | A | 640 - 1120 |
| Thermal protection | | | No |
| Phase failure sensitive | | | No |
| Switch off technique | | | Magnetic |
| Rated operating voltage | | V | 690 - 690 |
| Rated permanent current Iu | | A | 80 |
| Rated operation power at AC-3, 230 V | | kW | 22 |
| Rated operation power at AC-3, 400 V | | kW | 45 |
| Type of electrical connection of main circuit | | | Screw connection |
| Type of control element | | | Rocker lever |
| Device construction | | | Built-in device fixed built-in technique |
| With integrated auxiliary switch | | | No |
| With integrated under voltage release | | | No |
| Number of poles | | | 3 |
| Rated short-circuit breaking capacity Icu at 400 V, AC | | kA | 50 |
| Degree of protection (IP) | | | IP20 |
| Height | | mm | 195 |
| Width | | mm | 105 |
| Depth | | mm | 149 |

## Approvals

| | | | |
|---|---|---|---|
| Product Standards | | | UL 489; CSA-C22.2 No. 5-09; IEC 60947-2; CE marking |
| UL File No. | | | E31593 |
| UL Category Control No. | | | DKPU2 |
| CSA File No. | | | 022086 |
| CSA Class No. | | | 1432-01 |
| North America Certification | | | UL recognized, CSA certified |
| Conditions of Acceptability | | | Only used in motor circuits in conjunction with suitable contactor and overload relay. SCCR value applies for complete combination starter only, consisting of instantaneous trip circuit breaker, contactor and overload relay. |
| Specially designed for North America | | | Yes |
| Suitable for | | | Branch circuits, feeder circuits |
| Current Limiting Circuit-Breaker | | | No |
| Max. Voltage Rating | | | 600Y/347 V, 480 V |
| Degree of Protection | | | IEC: IP20; UL/CSA Type: - |

## Characteristics

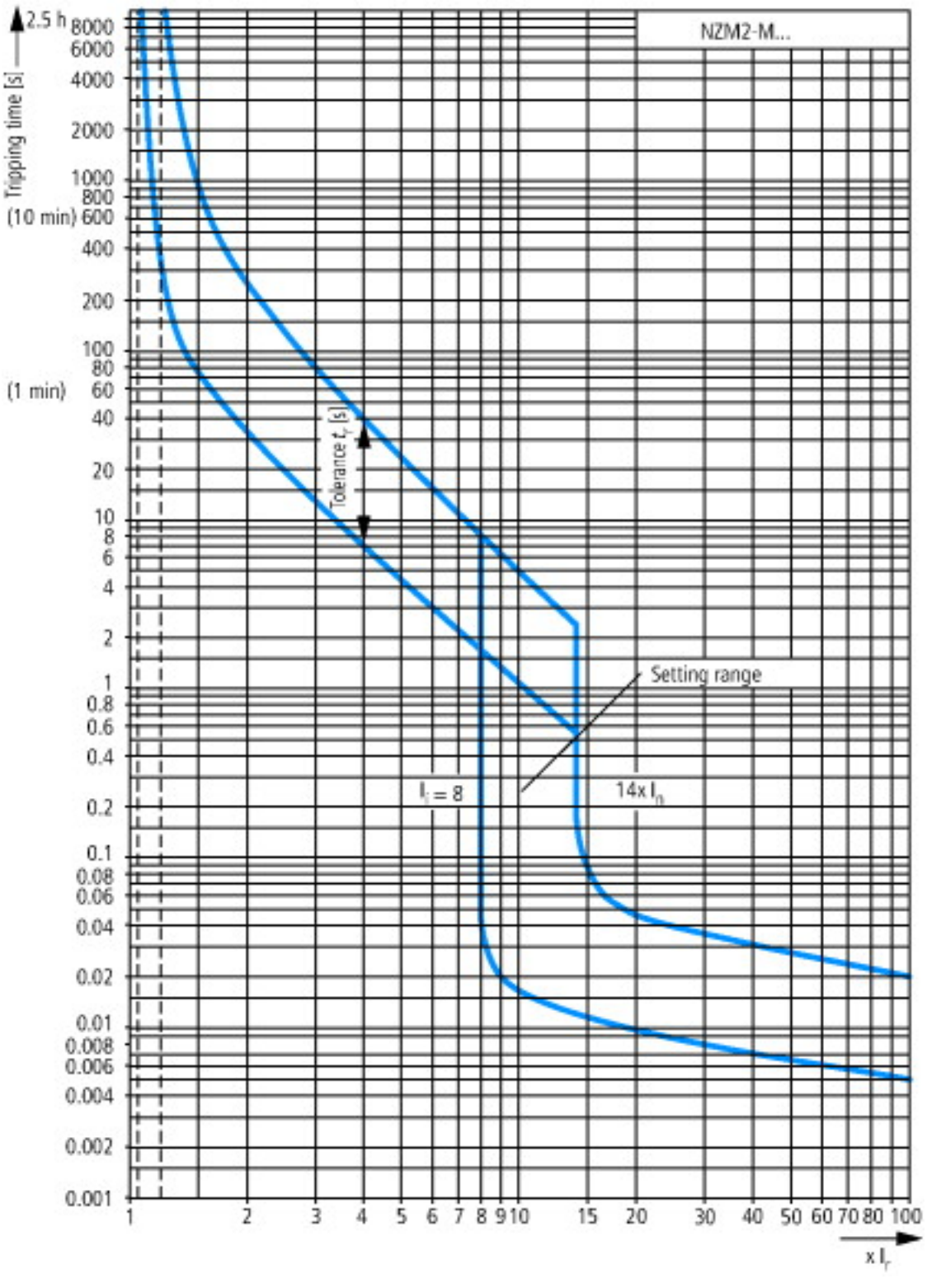


Short-circuit protection only!

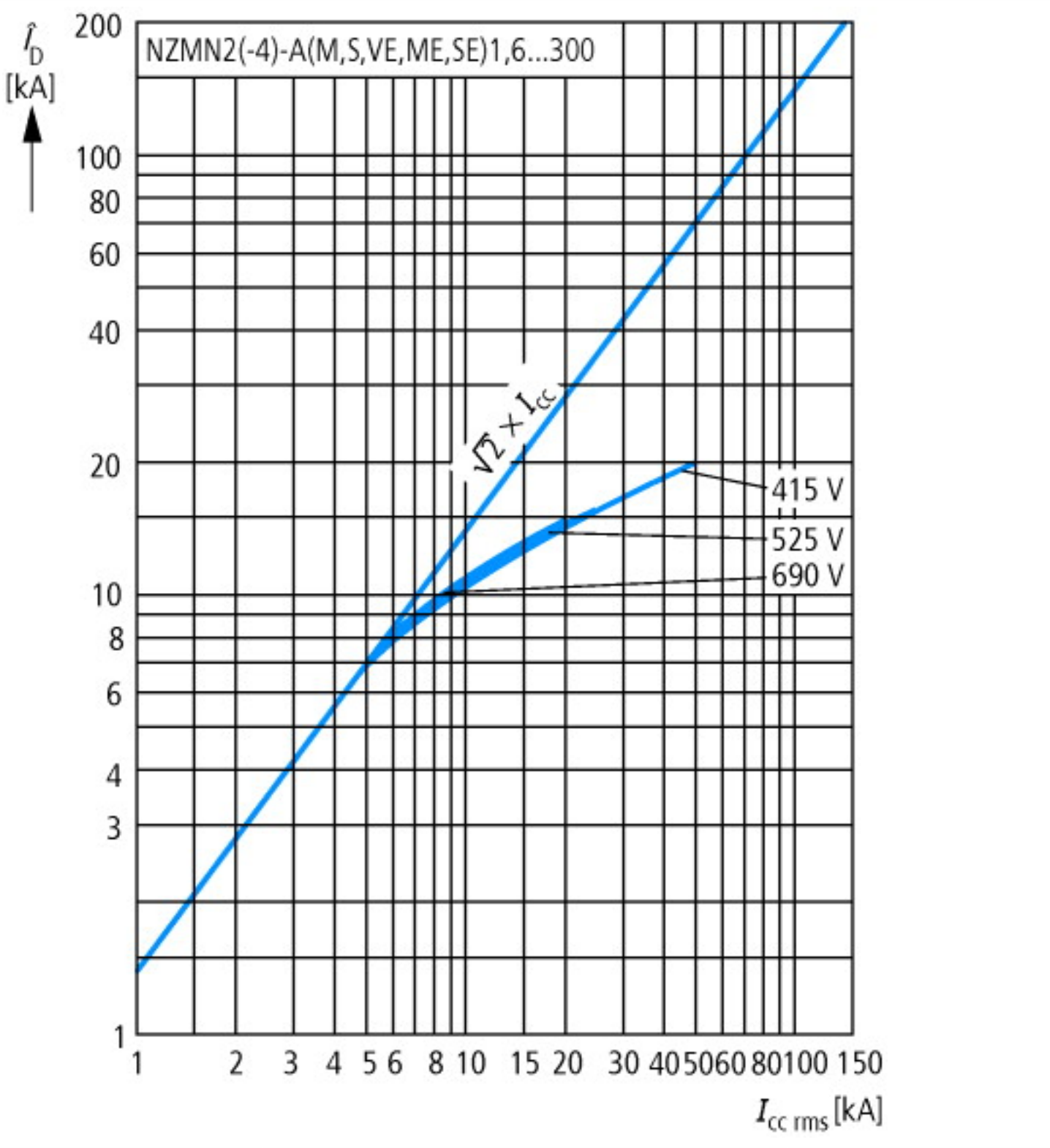
NZMN2(-4)-A(M,S,VE,ME,SE)1,6...300
$\hat{I}_D$ [kA]
200
100
80
60
40
20
10
8
6
4
3
1
$\sqrt{2} \times I_{cc}$
415 V
525 V
690 V
1
2
3
4
5
6
8
10
15
20
30
40
50
60
80
100
150
$I_{cc\ rms}$ [kA]

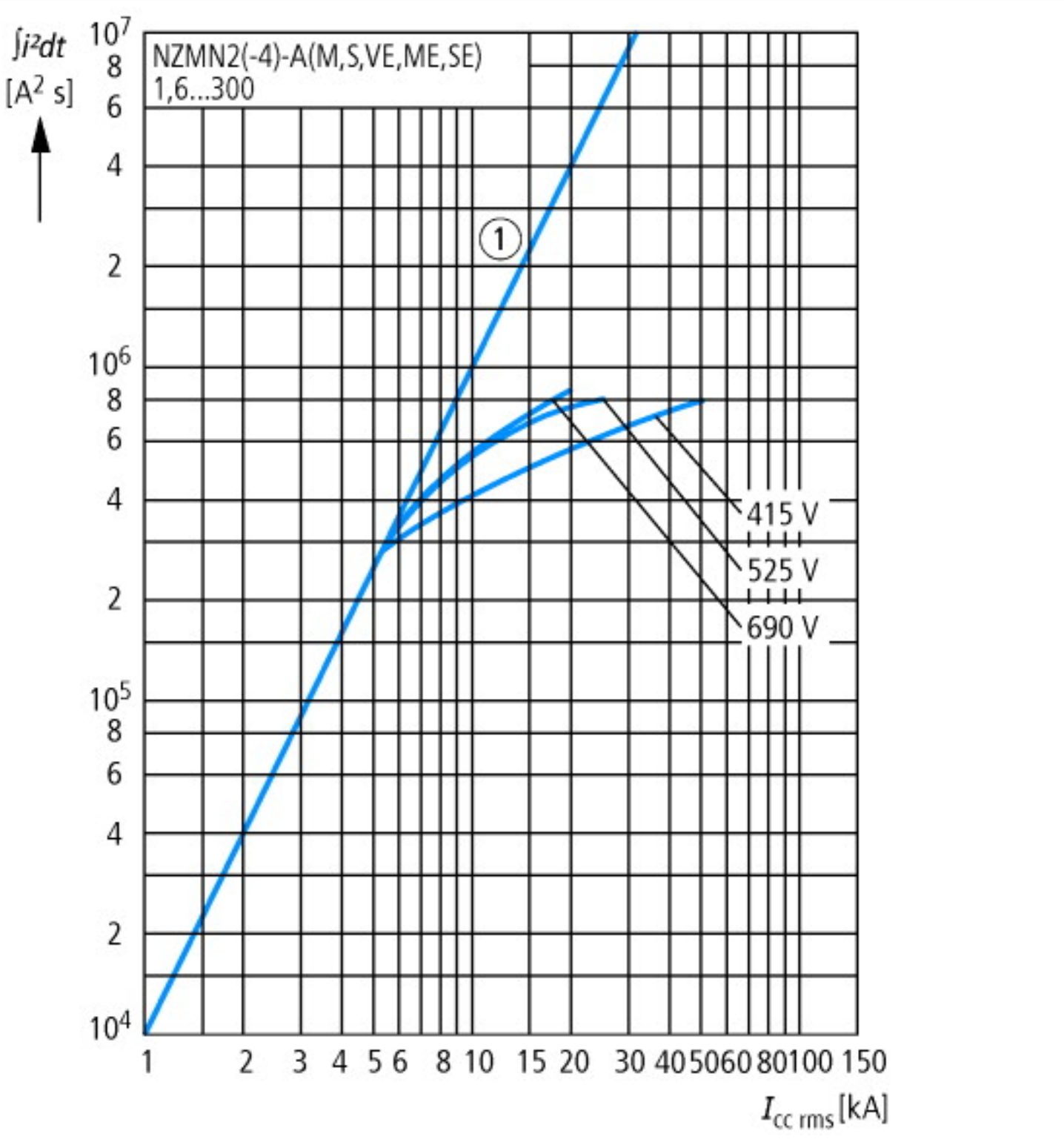
∫i²dt
[A² s]
NZMN2(-4)-A(M,S,VE,ME,SE)
1,6...300
1
415 V
525 V
690 V
10⁷
10⁶
10⁵
10⁴
1 2 3 4 5 6 8 10 15 20 30 40 50 60 80 100 150
I_cc rms [kA]

## Dimensions

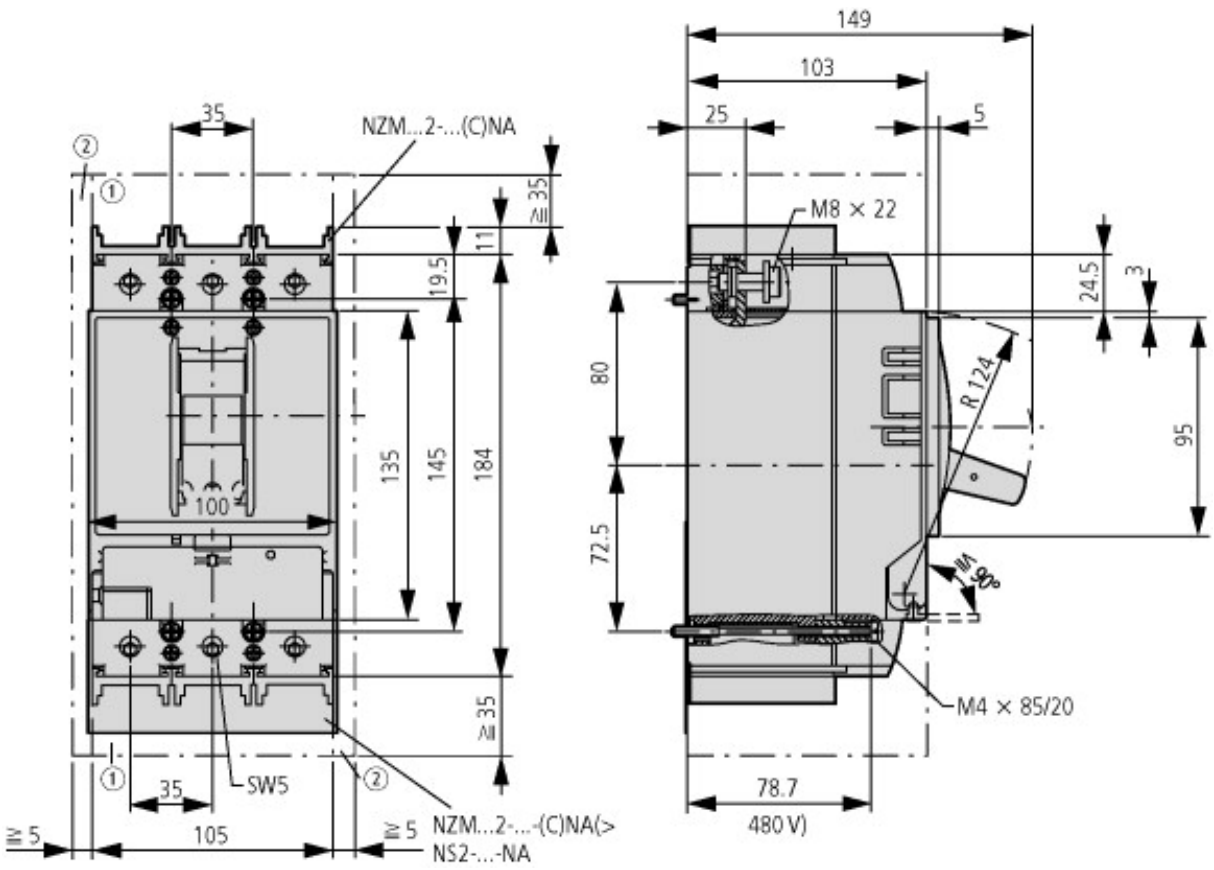


① Blow out area, minimum clearance to adjacent parts

② Minimum clearance to adjacent parts

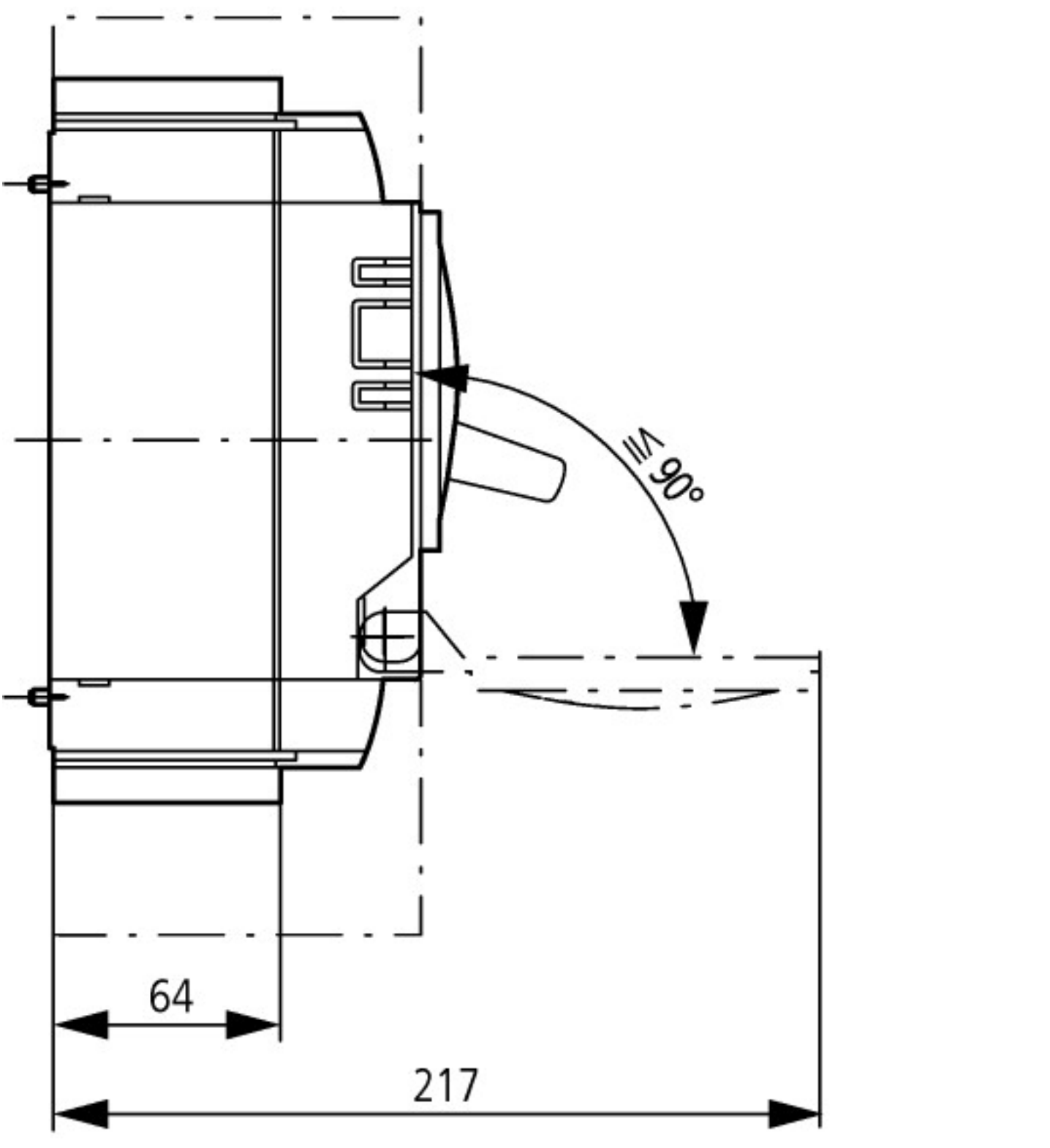


## Additional product information (links)

| IL01206006Z (AWA1230-1916) Circuit-Breaker, basic unit | |
|---|---|
| IL01206006Z (AWA1230-1916) Circuit-Breaker, basic unit | ftp://ftp.moeller.net/DOCUMENTATION/AWA_INSTRUCTIONS/IL01206006Z2015_11.pdf |
| Weight | http://ecat.moeller.net/flip-cat/?edition=HPLEN&startpage=17.171 |
| Temperature dependency, Derating | http://ecat.moeller.net/flip-cat/?edition=HPLEN&startpage=17.172 |
| Effective power loss | http://ecat.moeller.net/flip-cat/?edition=HPLEN&startpage=17.174 |


© 11/2016 by Eaton Industries GmbH