Similar to illustration

Circuit-breaker, 3p, 50A

Part no. **NZMN1-S50-CNA**
Article no. **281277**

Powering Business Worldwide

Delivery program

Product range			Circuit-breaker
Protective function			Short-circuit protection
Standard/Approval			UL/CSA, IEC
Installation type			Fixed
Release system			Thermomagnetic release
Description			Switches conform to UL/CSA as well as the IEC regulations. IEC switching performance values are contained on the rating plate. Motor protection in conjunction with contactor and overload relay With short-circuit release Without overload release Ir
Number of poles			3 pole
Standard equipment			Box terminal
Rated current = rated uninterrupted current	$I_n = I_u$	A	50
Setting range			
Short-circuit releases			
Non-delayed	$I_i = I_n$ x …		8 - 14

Technical data

General

Standards			IEC/EN 60947
Protection against direct contact			Finger and back of hand proof to VDE 0106 Part 100
Climatic proofing			Damp heat, constant, to IEC 60068-2-78 Damp heat, cyclic, to IEC 60068-2-30
Ambient temperature			
Ambient temperature, storage		°C	- 40 - + 70
Operation		°C	-25 - +70
Mechanical shock resistance (10 ms half-sinusoidal shock) according to IEC 60068-2-27		g	20 (half-sinusoidal shock 20 ms)
Safe isolation to EN 61140			
Between auxiliary contacts and main contacts		V AC	500
between the auxiliary contacts		V AC	300
Mounting position			
Mounting position			Vertical and 90° in all directions 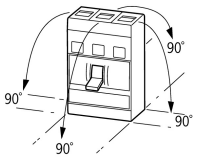 With residual-current release XFI: - NZM1, N1, NZM2, N2: vertical and 90° in all directions with plug-in adapter elements - NZM1, N1, NZM2, N2: vertical, 90° right/left with withdrawable unit: - NZM3, N3: vertical, 90 ° left - NZM4, N4: vertical with remote operator: - NZM2, N(S)2, NZM3, N(S)3, NZM4, N(S)4: vertical and 90° in all directions
Direction of incoming supply			as required
Degree of protection			

Device			In the operating controls area: IP20 (basic degree of protection)
Enclosures			With insulating surround: IP40 With door coupling rotary handle: IP66
Terminations			Tunnel terminal: IP10 Phase isolator and strip terminal: IP00
Other technical data (sheet catalogue)			Weight Temperature dependency, Derating Effective power loss

Circuit-breakers

Rated surge voltage invariability	U_{imp}		
Main contacts		V	6000
Auxiliary contacts		V	6000
Rated operational voltage	U_e	V AC	690
Rated operational voltage	U_e	V DC	500
			Details apply for 3 pole system protection circuit-breaker with thermomagnetic release NZMN(H)1(2)(3)-A… to 500 A. For rated operating voltage switching via 3 contacts: DC correction factor for instantaneous release response value: NZM1: 1.25, NZM2: 1.35, NZM3: 1.45 Set value for I_i at DC = set value I_i AC/correction factor DC **Switching of one pole via two series contacts** 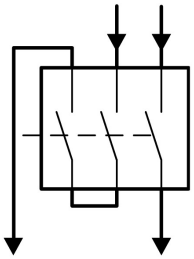 **Switching of one pole via three series contacts** 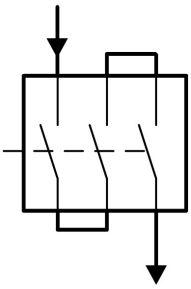
Overvoltage category/pollution degree			III/3
Rated insulation voltage	U_i	V	690
Use in unearthed supply systems		V	≤ 690

Switching capacity

Rated short-circuit making capacity	I_{cm}		
240 V	I_{cm}	kA	187
400/415 V	I_{cm}	kA	105
440 V 50/60 Hz	I_{cm}	kA	74
525 V 50/60 Hz	I_{cm}	kA	40
690 V 50/60 H	Ic	kA	17
Rated short-circuit breaking capacity I_{cn}	I_{cn}		
Icu to IEC/EN 60947 test cycle O-t-CO	Icu	kA	
240 V 50/60 Hz	I_{cu}	kA	85
400/415 V 50/60 Hz	I_{cu}	kA	50
440 V 50/60 Hz	I_{cu}	kA	35
525 V 50/60 Hz	I_{cu}	kA	20
690 V 50/60 Hz	I_{cu}	kA	10
500 V DC	I_{cu}	kA	15
Ics to IEC/EN 60947 test cycle O-t-CO-t-CO	Ics	kA	
240 V 50/60 Hz	I_{cs}	kA	85
400/415 V 50/60 Hz	I_{cs}	kA	50
440 V 50/60 Hz	I_{cs}	kA	35
525 V 50/60 Hz	I_{cs}	kA	10
690 V 50/60 Hz	I_{cs}	kA	7.5
Maximum low-voltage h.b.c. fuse		A gG/gL	200

			Maximum back-up fuse, if the expected short-circuit currents at the installation location exceed the switching capacity of the circuit-breaker.
Utilization category to IEC/EN 60947-2			A
Rated making and breaking capacity			
Rated operational current	I_e	A	
AC-1			
400/415 V 50/60 Hz	I_e	A	160
415 V	I_e	A	125
690 V 50/60 Hz	I_e	A	50
AC--3			
400/415 V 50/60 Hz	I_e	A	50
690 V 50/60 Hz	I_e	A	50
DC-1			
500 V DC	I_e	CSA	50
DC - 3			
500 V DC	I_e	CSA	50
Lifespan, mechanical(of which max. 50 % trip by shunt/undervoltage release)	Operations		20000
Lifespan, electrical			
AC--3			
400 V 50/60 Hz	Operations		7500
415 V 50/60 Hz	Operations		7500
690 V 50/60 Hz	Operations		5000
DC-1			
500 V DC		Operations	10000
DC - 3			
500 V DC	Operations		5000
Max. operating frequency		Ops/h	120
Total downtime in a short-circuit		ms	< 10

Terminal capacity

Standard equipment			Box terminal
Round copper conductor			
Box terminal			
Solid		mm^2	1 x (12 … 6)
Stranded		mm^2	1 x (25 - 70) 2 x 25
Tunnel terminal			
Solid		mm^2	1 x (16 - 95)
Stranded		mm^2	
Stranded		mm^2	1 x (4 … 3/0)
Bolt terminal and rear-side connection			
Direct on the switch			
Solid		mm^2	1 x (12 … 6) 2 x (9 … 6)
Stranded		mm^2	1 x (4 … 2/0)
Al conductors, Cu cable			
Solid		mm^2	1 x 16
Cu strip (number of segments x width x segment thickness)			
Box terminal			
	min.	mm	2 x 9 x 0.8
	max.	mm	9 x 9 x 0.8
Copper busbar (width x thickness)	mm		
Bolt terminal and rear-side connection			
Screw connection			M8
Direct on the switch			

	min.	mm	12 x 5
	max.	mm	16 x 5
Control cables			
		mm^2	1 x (18 … 14) 2 x (18 … 16)

Design verification as per IEC/EN 61439

Technical data for design verification			
Rated operational current for specified heat dissipation	I_n	A	50
Equipment heat dissipation, current-dependent	P_{vid}	W	4.22
Operating ambient temperature min.		°C	-25
Operating ambient temperature max.		°C	70
IEC/EN 61439 design verification			
10.2 Strength of materials and parts			
10.2.2 Corrosion resistance			Meets the product standard's requirements.
10.2.3.1 Verification of thermal stability of enclosures			Meets the product standard's requirements.
10.2.3.2 Verification of resistance of insulating materials to normal heat			Meets the product standard's requirements.
10.2.3.3 Verification of resistance of insulating materials to abnormal heat and fire due to internal electric effects			Meets the product standard's requirements.
10.2.4 Resistance to ultra-violet (UV) radiation			Meets the product standard's requirements.
10.2.5 Lifting			Does not apply, since the entire switchgear needs to be evaluated.
10.2.6 Mechanical impact			Does not apply, since the entire switchgear needs to be evaluated.
10.2.7 Inscriptions			Meets the product standard's requirements.
10.3 Degree of protection of ASSEMBLIES			Does not apply, since the entire switchgear needs to be evaluated.
10.4 Clearances and creepage distances			Meets the product standard's requirements.
10.5 Protection against electric shock			Does not apply, since the entire switchgear needs to be evaluated.
10.6 Incorporation of switching devices and components			Does not apply, since the entire switchgear needs to be evaluated.
10.7 Internal electrical circuits and connections			Is the panel builder's responsibility.
10.8 Connections for external conductors			Is the panel builder's responsibility.
10.9 Insulation properties			
10.9.2 Power-frequency electric strength			Is the panel builder's responsibility.
10.9.3 Impulse withstand voltage			Is the panel builder's responsibility.
10.9.4 Testing of enclosures made of insulating material			Is the panel builder's responsibility.
10.10 Temperature rise			The panel builder is responsible for the temperature rise calculation. Eaton will provide heat dissipation data for the devices.
10.11 Short-circuit rating			Is the panel builder's responsibility. The specifications for the switchgear must be observed.
10.12 Electromagnetic compatibility			Is the panel builder's responsibility. The specifications for the switchgear must be observed.
10.13 Mechanical function			The device meets the requirements, provided the information in the instruction leaflet (IL) is observed.

Technical data ETIM 6.0

Low-voltage industrial components (EG000017) / Motor protection circuit-breaker (EC000074)			
Electric engineering, automation, process control engineering / Low-voltage switch technology / Circuit breaker (LV < 1 kV) / Motor protection circuit-breaker (ecl@ss8.1-27-37-04-01 [AGZ529013])			
Overload release current setting		A	0 - 0
Adjustment range undelayed short-circuit release		A	400 - 700
Thermal protection			No
Phase failure sensitive			No
Switch off technique			Magnetic
Rated operating voltage		V	690 - 690
Rated permanent current Iu		A	50
Rated operation power at AC-3, 230 V		kW	15
Rated operation power at AC-3, 400 V		kW	22
Type of electrical connection of main circuit			-
Type of control element			Rocker lever
Device construction			Built-in device fixed built-in technique

With integrated auxiliary switch			No
With integrated under voltage release			No
Number of poles			3
Rated short-circuit breaking capacity Icu at 400 V, AC		kA	50
Degree of protection (IP)			IP20
Height		mm	165.5
Width		mm	90
Depth		mm	88

Approvals

Product Standards			UL 489; CSA-C22.2 No. 5-09; IEC 60947-2; CE marking
UL File No.			E31593
UL Category Control No.			DKPU2
CSA File No.			022086
CSA Class No.			1432-01
North America Certification			UL recognized, CSA certified
Conditions of Acceptability			Only used in motor circuits in conjunction with suitable contactor and overload relay. SCCR value applies for complete combination starter only, consisting of instantaneous trip circuit breaker, contactor and overload relay.
Specially designed for North America			Yes
Suitable for			Branch circuits, feeder circuits
Current Limiting Circuit-Breaker			No
Max. Voltage Rating			480Y/277 V
Degree of Protection			IEC: IP20; UL/CSA Type: -

Characteristics

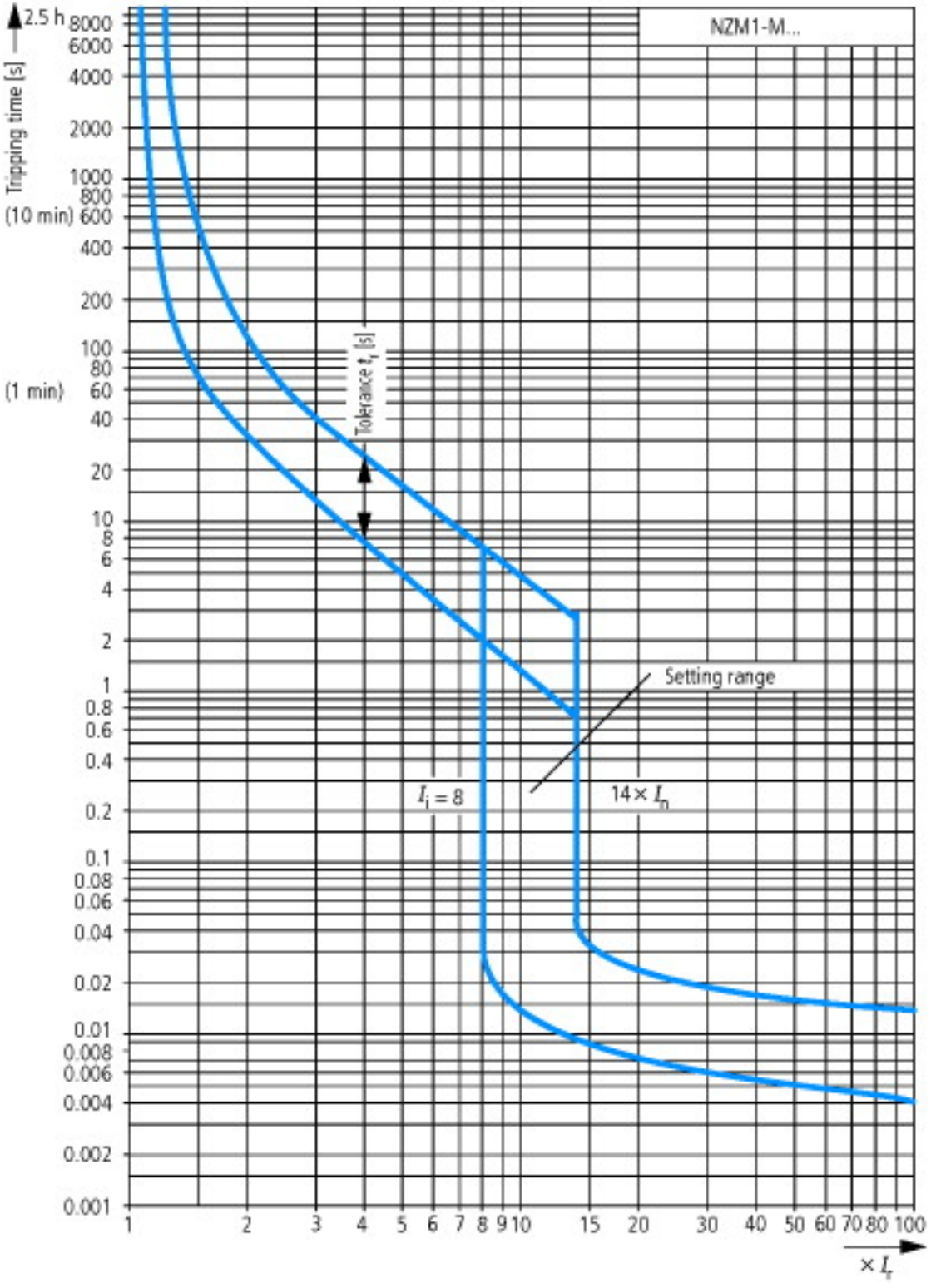

Short-circuit protection only!

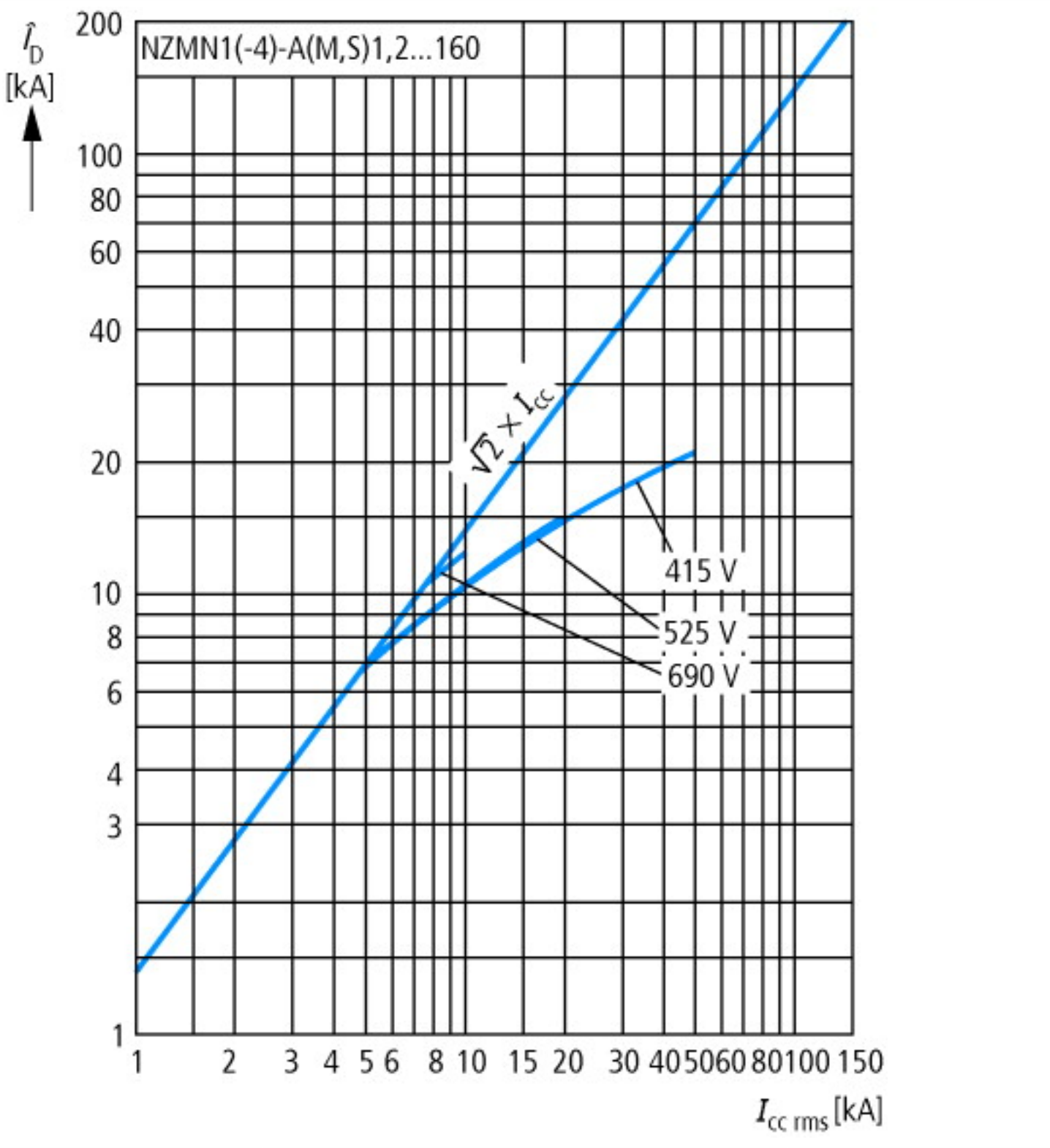
NZMN1(-4)-A(M,S)1,2...160
$\hat{I}_D$ [kA]
200
100
80
60
40
20
10
8
6
4
3
1
$\sqrt{2} \times I_{cc}$
415 V
525 V
690 V
1
2
3
4
5
6
8
10
15
20
30
40
50
60
80
100
150
$I_{cc\ rms}$ [kA]

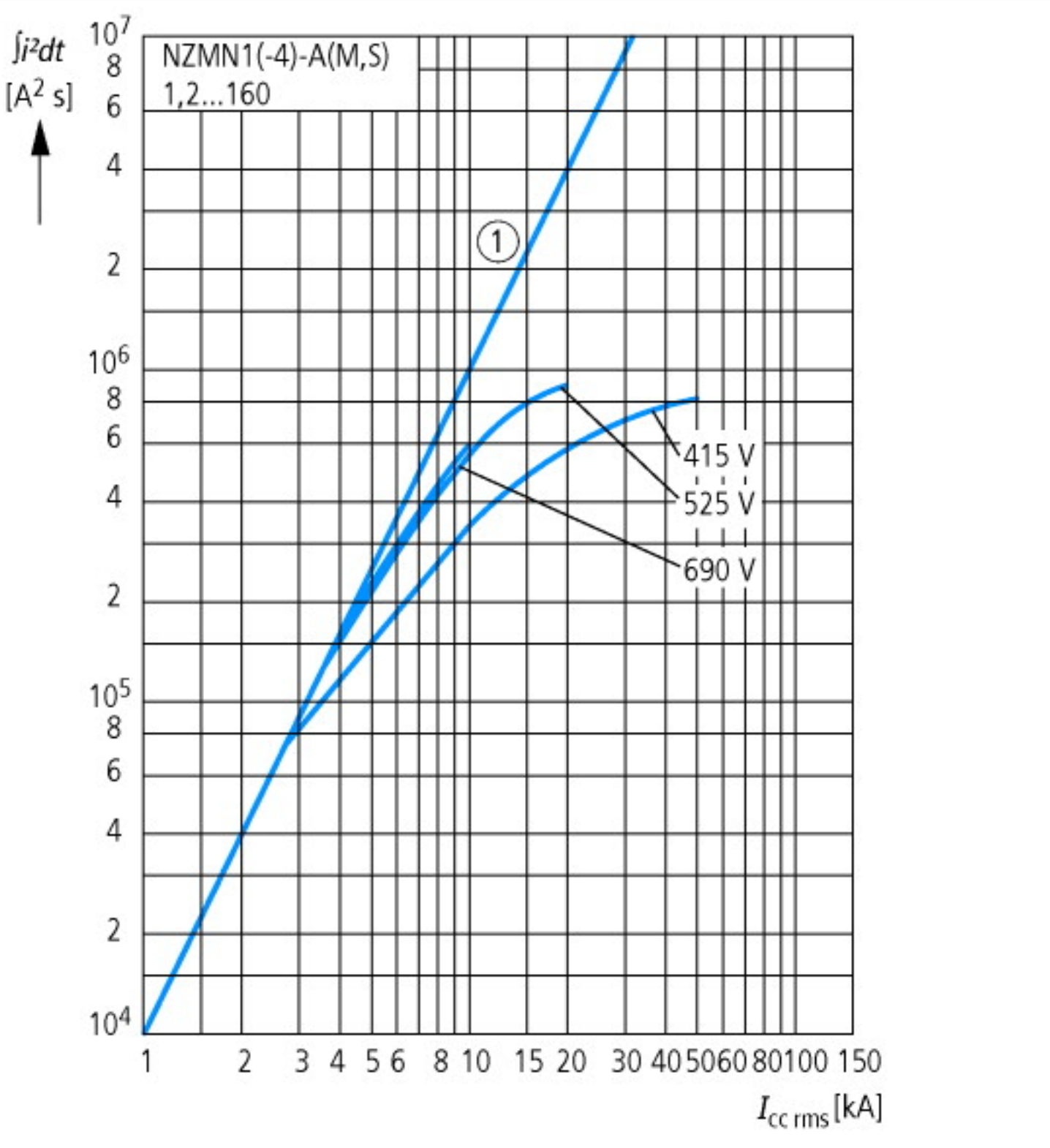
∫i²dt
[A² s]
NZMN1(-4)-A(M,S)
1,2...160
1
415 V
525 V
690 V
10⁷
10⁶
10⁵
10⁴
1 2 3 4 5 6 8 10 15 20 30 40 50 60 80 100 150
I_cc rms [kA]

Dimensions

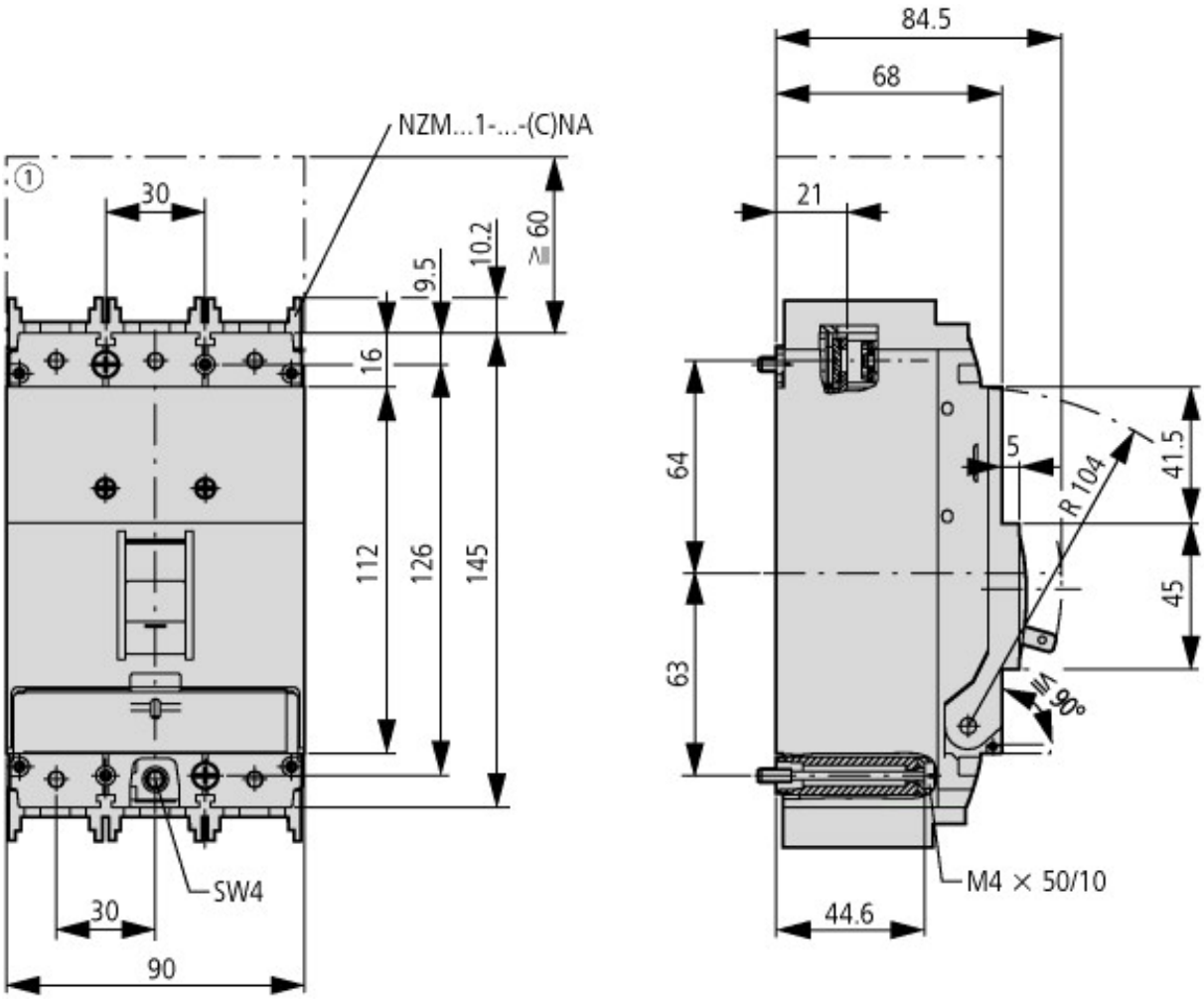

① Blow out area, minimum clearance to adjacent parts

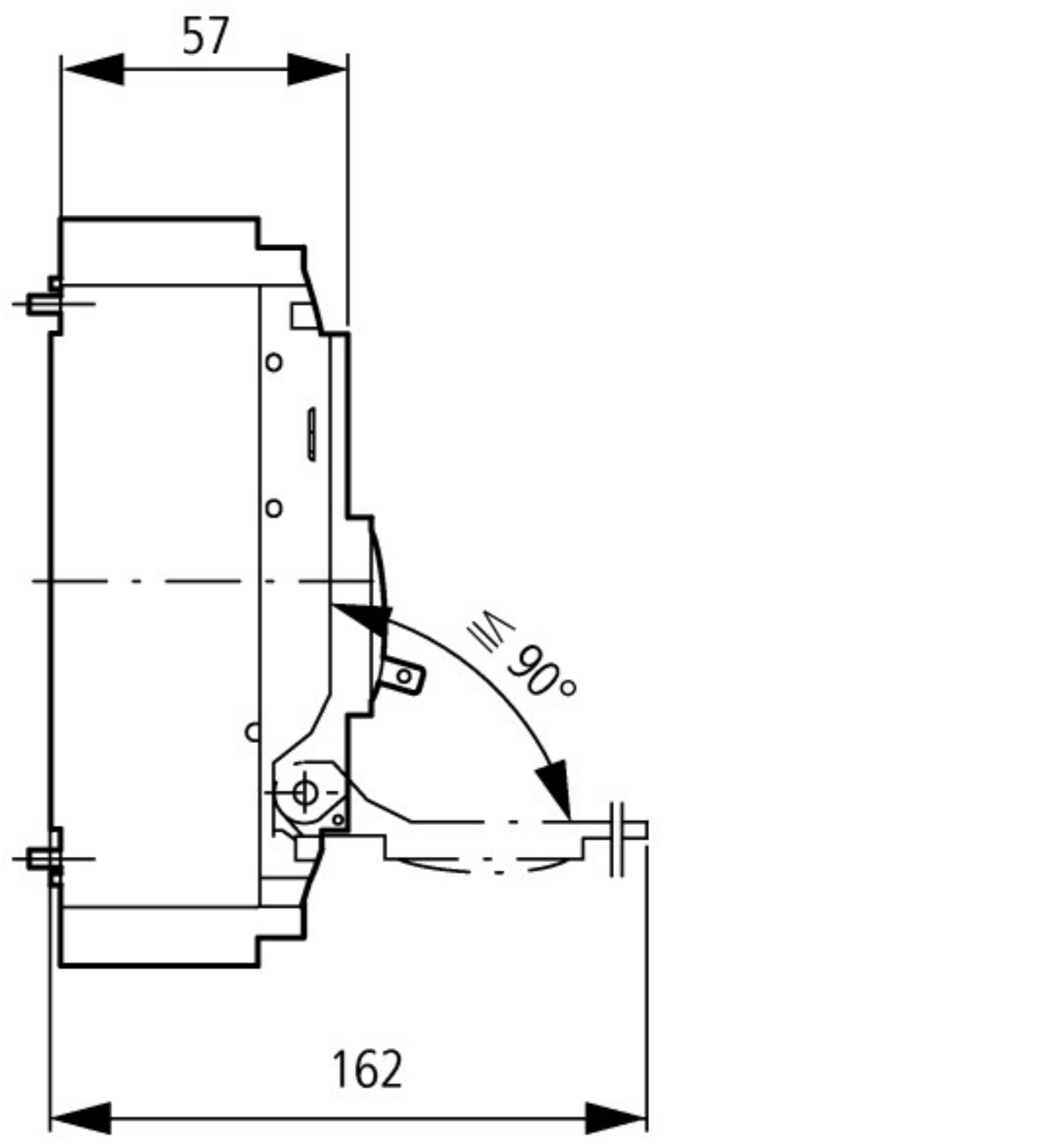

Additional product information (links)

IL01203004Z (AWA1230-1913) Circuit-breaker, Switch-Disconnector	
IL01203004Z (AWA1230-1913) Circuit-breaker, Switch-Disconnector	ftp://ftp.moeller.net/DOCUMENTATION/AWA_INSTRUCTIONS/IL01203004Z2015_11.pdf
Weight	http://ecat.moeller.net/flip-cat/?edition=HPLEN&startpage=17.171
Temperature dependency, Derating	http://ecat.moeller.net/flip-cat/?edition=HPLEN&startpage=17.172
Effective power loss	http://ecat.moeller.net/flip-cat/?edition=HPLEN&startpage=17.174

© 11/2016 by Eaton Industries GmbH