Mushroom actuator, red, maintained

Part no. M22S-DRP-R
Article no. 216746
Catalog No. M22S-DRP-RQ

Powering Business Worldwide

Delivery program

Product range			RMQ-Titan
Basic function			Mushroom-headed pushbutton
Single unit/Complete unit			Single unit
Design			Mushroom
			maintained
Colour			
Mushroom			red
Mushroom colour			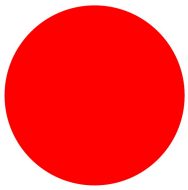
Button plate			
button plate			red
Button plate			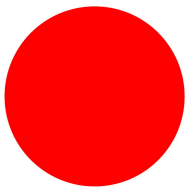
			Blank
Degree of Protection			IP67, IP69K
Front ring			Bezel: black
Connection to SmartWire-DT			Yes, with SWD-RMQ connections
Actuator travel and actuation force as per DIN EN 60947-5-1, K.5.4.1			
Minimum force for positive opening	N		0
Front dimensions			22 x 22
Function			maintained
Instructions			Stay-put/spring-return function can be changed on device

Technical data

General

Standards			IEC/EN 60947 VDE 0660
Lifespan, mechanical	Operations	x 10^6	> 1
Operating frequency	Operations/h		1800
Actuating force		n	5
Climatic proofing			Damp heat, constant, to IEC 60068-2-78 Damp heat, cyclic, to IEC 60068-2-30
Ambient temperature			
Open		°C	-25 - +70
Storage		°C	- 40 - + 80
Mounting position			As required
Mechanical shock resistance		g	30 Shock duration 11 ms Sinusoidal according to IEC 60068-2-27

Design verification as per IEC/EN 61439

Technical data for design verification			
Rated operational current for specified heat dissipation	I_n	A	0
Heat dissipation per pole, current-dependent	P_{vid}	W	0
Equipment heat dissipation, current-dependent	P_{vid}	W	0
Static heat dissipation, non-current-dependent	P_{vs}	W	0
Heat dissipation capacity	P_{diss}	W	0
Operating ambient temperature min.		°C	-25
Operating ambient temperature max.		°C	70
IEC/EN 61439 design verification			
10.2 Strength of materials and parts			
10.2.2 Corrosion resistance			Meets the product standard's requirements.
10.2.3.1 Verification of thermal stability of enclosures			Meets the product standard's requirements.
10.2.3.2 Verification of resistance of insulating materials to normal heat			Meets the product standard's requirements.
10.2.3.3 Verification of resistance of insulating materials to abnormal heat and fire due to internal electric effects			Meets the product standard's requirements.
10.2.4 Resistance to ultra-violet (UV) radiation			Please enquire
10.2.5 Lifting			Does not apply, since the entire switchgear needs to be evaluated.
10.2.6 Mechanical impact			Does not apply, since the entire switchgear needs to be evaluated.
10.2.7 Inscriptions			Meets the product standard's requirements.
10.3 Degree of protection of ASSEMBLIES			Does not apply, since the entire switchgear needs to be evaluated.
10.4 Clearances and creepage distances			Meets the product standard's requirements.
10.5 Protection against electric shock			Does not apply, since the entire switchgear needs to be evaluated.
10.6 Incorporation of switching devices and components			Does not apply, since the entire switchgear needs to be evaluated.
10.7 Internal electrical circuits and connections			Is the panel builder's responsibility.
10.8 Connections for external conductors			Is the panel builder's responsibility.
10.9 Insulation properties			
10.9.2 Power-frequency electric strength			Is the panel builder's responsibility.
10.9.3 Impulse withstand voltage			Is the panel builder's responsibility.
10.9.4 Testing of enclosures made of insulating material			Is the panel builder's responsibility.
10.10 Temperature rise			Not applicable.
10.11 Short-circuit rating			Is the panel builder's responsibility. The specifications for the switchgear must be observed.
10.12 Electromagnetic compatibility			Is the panel builder's responsibility. The specifications for the switchgear must be observed.
10.13 Mechanical function			The device meets the requirements, provided the information in the instruction leaflet (IL) is observed.

Technical data ETIM 6.0

Low-voltage industrial components (EG000017) / Front element for mushroom push-button (EC001038)

Electric engineering, automation, process control engineering / Low-voltage switch technology / Command and alarm device / Front element for mushroom push-button actuators (ecl@ss8.1-27-37-12-12 [AKF030011])

Colour button			Red
Construction type lens			Round
Diameter cap		mm	36.5
Hole diameter		mm	22
Width opening		mm	0
Height meter opening		mm	0
Degree of protection (IP)			IP67
Type of button			Flat
Suitable for illumination			No
Switching function latching			Yes
Spring-return			Yes
With front ring			Yes
Material front ring			Plastic
Colour front ring			Black
Suitable for emergency stop			No

Unlocking method		-

Approvals

Product Standards		IEC/EN 60947-5; UL 508; CSA-C22.2 No. 14-05; CSA-C22.2 No. 94-91; CE marking
UL File No.		E29184
UL Category Control No.		NKCR
CSA File No.		012528
CSA Class No.		3211-03
North America Certification		UL listed, CSA certified
Degree of Protection		UL/CSA Type 3R, 4X, 12, 13

Dimensions

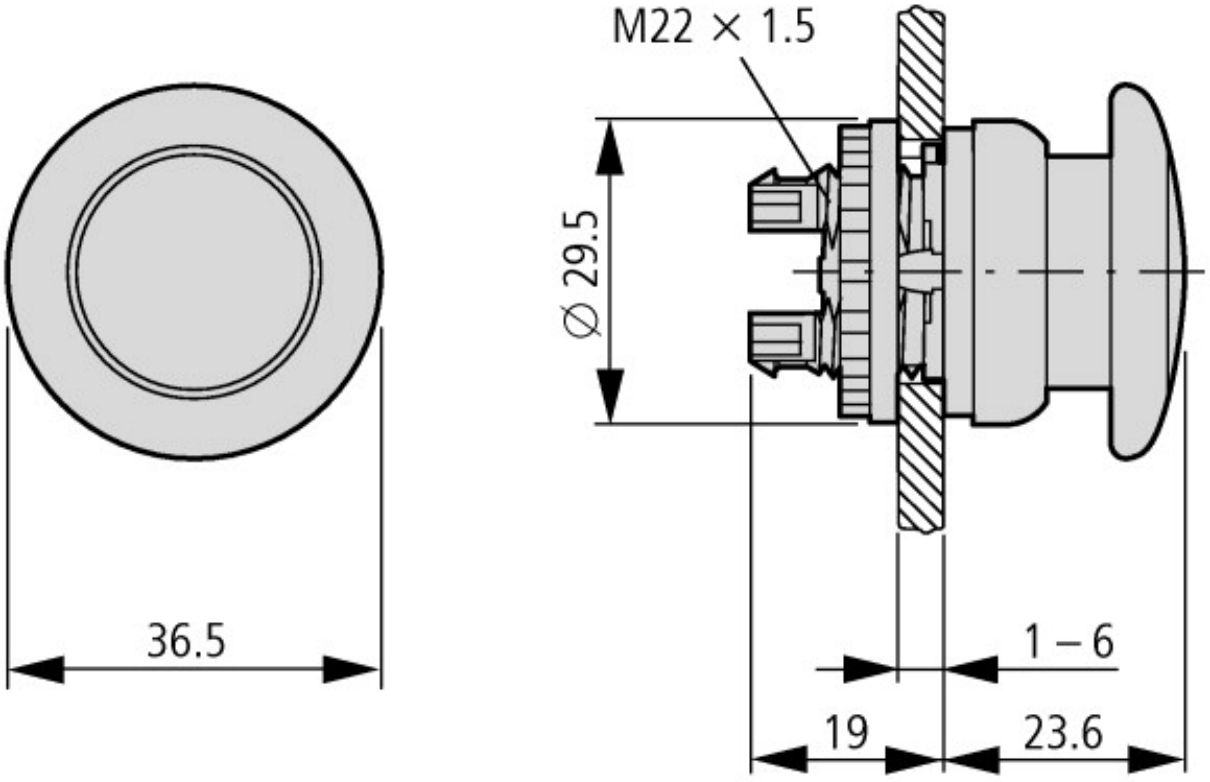

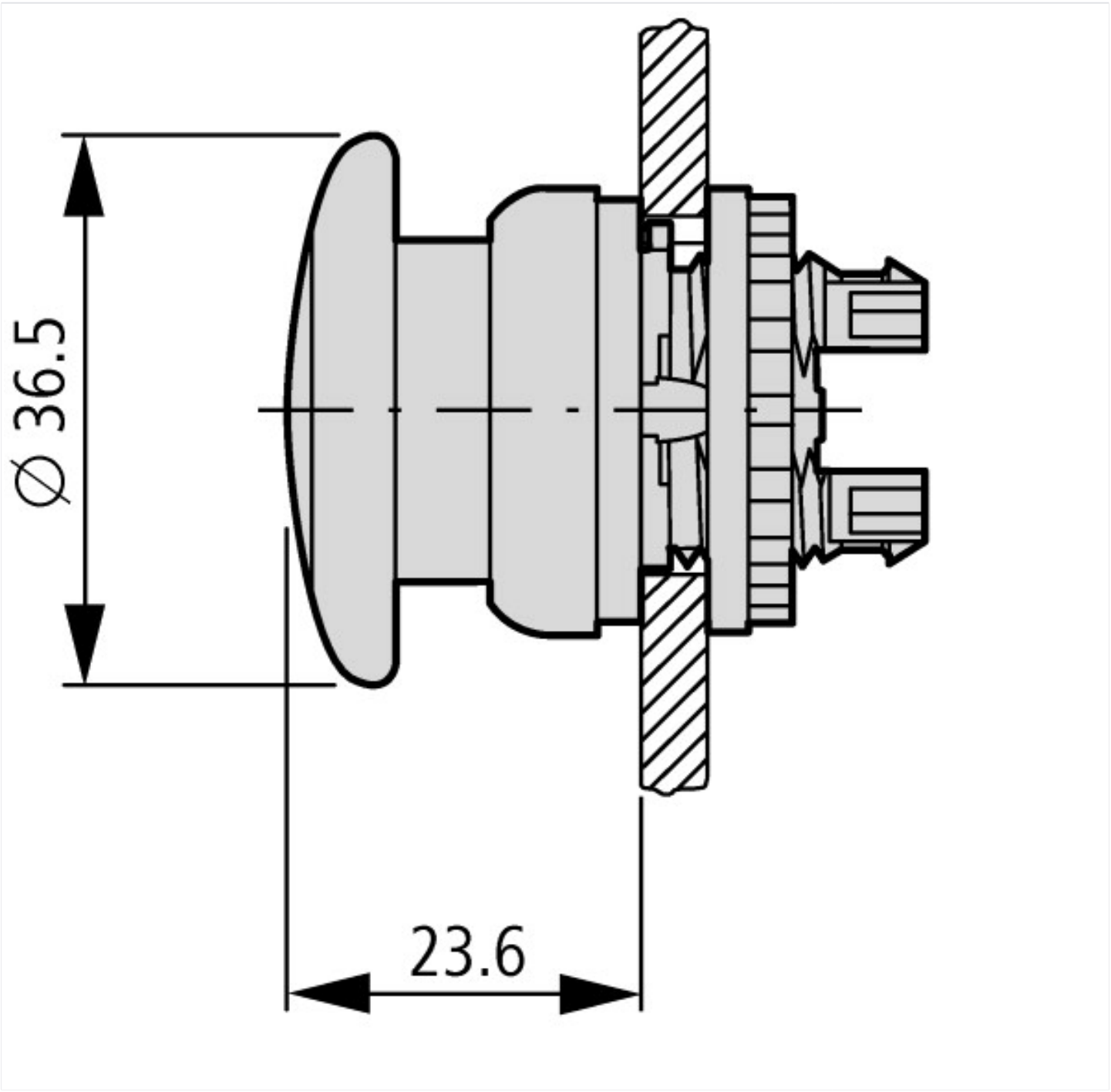

Additional product information (links)

IL04716002Z (AWA1160-1745) RMQ-Titan System	
IL04716002Z (AWA1160-1745) RMQ-Titan System	ftp://ftp.moeller.net/DOCUMENTATION/AWA_INSTRUCTIONS/IL04716002Z2016_09.pdf

© 11/2016 by Eaton Industries GmbH