Flange plate, IP66_x, metal, blind

Part no. **F3A-XP**
Article no. **113426**

Powering Business Worldwide

Delivery program

Product range		Accessories CS
Accessories		Flanges
Description		Blank plate 2 mm, with powder coating RAL 7035, sponge-rubbed gasket
Material		Steel plate
Cable entry		-
Surface finish		RAL 7035

Technical data

Material characteristics

Material		Steel plate
Surface finish		RAL 7035

Dimensions

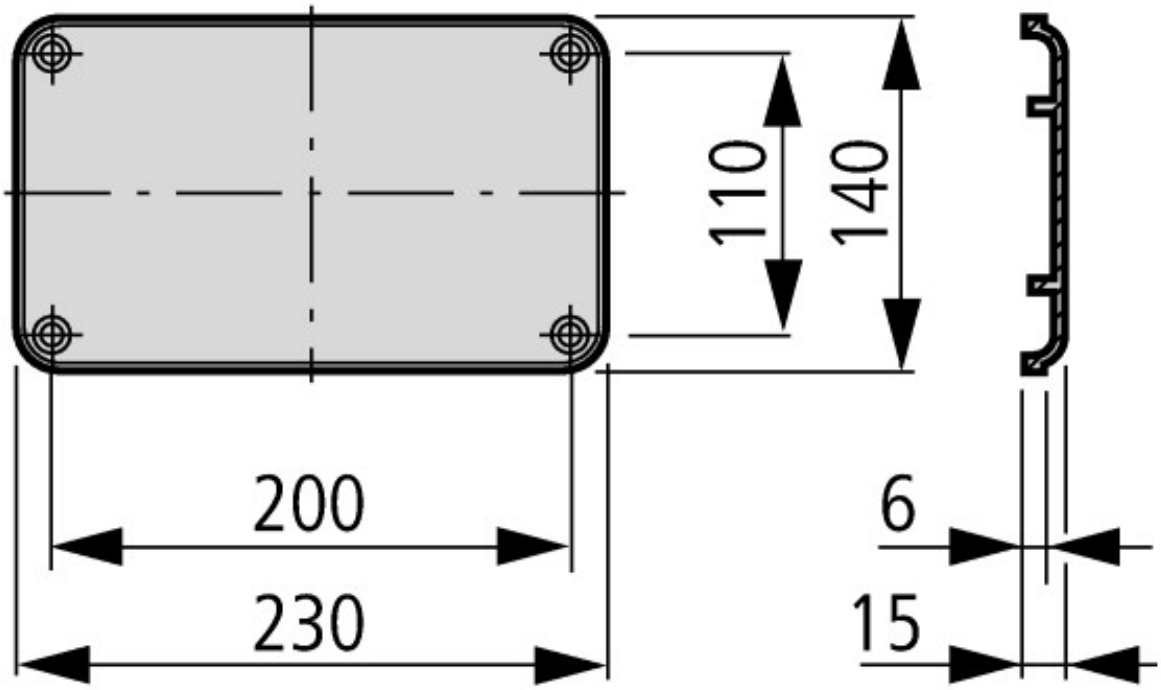

Additional product information (links)

Declaration of conformity	http://intranet.moeller.net/technik_daten/file/produkt_deklarationen/file/konformitaeten/00002/00002259.pdf

© 11/2016 by Eaton Industries GmbH