Variable frequency drive SPX 3-/3-phase 480 V 0.75 kW ; dynamic vector control; protection type IP54; integrated EMC filter and braking transistor

Powering Business Worldwide

Part no. SPX001A2-4A1B1
Article no. 125207
Catalog No. SPX001A2-4A1B1

Delivery program

Product range			Variable frequency drives
Part group reference (e.g. DIL)			SPX
Rated operational voltage	U_e		400 V AC, 3-phase 480 V AC, 3-phase 500 V AC, 3-phase
Output voltage with V_e	U_2		400 V AC, 3-phase 480 V AC, 3-phase 500 V AC, 3-phase
Mains voltage (50/60Hz)	U_{LN}	V	380 (-15%) - 500 (+10%)
Rated operational current			
At 150% overload	I_e	A	2.2
At 110% overload	I_e	A	3.3
Note			Overload cycle for 60 s every 600 s
Assigned motor rating			
Note			For AC motors with internal and external ventilation with 50 Hz / 60 Hz
Note			Overload cycle for 60 s every 600 s
Note			at 400 V, 50 Hz
150 % Overload	P	kW	0.75
110 % Overload	P	kW	1.1
150 % Overload	I_M	A	1.9
110 % Overload	I_M	A	2.6
Note			at 440 - 480 V, 60 Hz
150 % Overload	P	HP	1
110 % Overload	P	HP	1.5
150 % Overload	I_M	A	2.1
110 % Overload	I_M	A	3
Degree of Protection			IP54
Fieldbus connection (optional)			PROFIBUS-DP LonWorks CANopen® DeviceNet Modbus-TCP BACnet/IP
Fitted with			Radio interference suppression filter Brake chopper OLED display DC link choke
Frame size			FR4
Connection to SmartWire-DT			No

Technical data

General

Standards			Specification for general requirements: IEC/EN 61800-2 EMC requirements: IEC/EN 61800-3 Safety requirements: IEC/EN 61800-5-1
Certifications			CE, UL, cUL, c-Tick
Production quality			RoHS, ISO 9001
Climatic proofing	ρ_w	%	< 95% relative humidity, no condensation, no corrosion, no dripping water

Ambient temperature			
operation (150 % overload)	ϑ	°C	-10 - +50
operation (110 % overload)	ϑ	°C	-10 - +40
Storage	ϑ	°C	-40 - +70
Radio interference level			
Radio interference class (EMC)			C2, C3, depending on the motor cable length, the connected load, and ambient conditions. External radio interference suppression filters (optional) may be necessary.
Environment (EMC)			1st and 2nd environments
Mounting position			Vertical
Altitude		m	0 - 1000 m above sea level above 1000 m with 1 % performance reduction per 100 m max. 3000 m
Degree of Protection			IP54
Protection against direct contact			BGV A3 (VBG4, finger- and back-of-hand proof)

Main circuit

Supply			
Rated operational voltage	U_e		400 V AC, 3-phase 480 V AC, 3-phase 500 V AC, 3-phase
Mains voltage (50/60Hz)	U_{LN}	V	380 (-15%) - 500 (+10%)
System configuration			AC supply systems with earthed center point
Supply frequency	f_{LN}	Hz	50/60
Frequency range	f_{LN}	Hz	45 - 66
Power section			
Function			Frequency inverter with internal DC link and IGBT inverter
Output voltage with V_e	U_2		400 V AC, 3-phase 480 V AC, 3-phase 500 V AC, 3-phase
Output Frequency	f_2	Hz	0 - 50/60 (max. 320)
Switching frequency	f_{PWM}	kHz	10 adjustable 1 - 16
Operation Mode			U/f control sensorless vector control (SLV) optional: Vector control with feedback (CLV)
Frequency resolution (setpoint value)	Δf	Hz	0.01
Rated operational current			
At 150% overload	I_e	A	2.2
At 110% overload	I_e	A	3.3
Fitted with			Radio interference suppression filter Brake chopper OLED display DC link choke
Frame size			FR4
Motor feeder			
Note			For AC motors with internal and external ventilation with 50 Hz / 60 Hz
Note			Overload cycle for 60 s every 600 s
Note			at 400 V, 50 Hz
150 % Overload	P	kW	0.75
110 % Overload	P	kW	1.1
Note			at 440 - 480 V, 60 Hz
150 % Overload	P	HP	1
110 % Overload	P	HP	1.5

Control section

External control voltage	U_c	V	24 V DC (max. 250 mA)
Reference voltage	U_s	V	10 V DC (max. 10 mA)
Analog inputs			2, parameterizable, 0 - 10 V DC, 0/4 - 20 mA
Analog outputs			1, parameterizable, 0/4 - 20 mA
Digital inputs			6, parameterizable, max. 30 V DC
Digital outputs			1, parameterizable, 48 V DC/50 mA
Relay outputs			2, parameterizable, N/O, 8 A (24 V DC) / 8 A (250 V AC) / 0,4 A (125 V DC)

Assigned switching and protective elements

Power Wiring			
150 % overload (CT/I_H, at 50 °C)			DX-LN3-004
Motor feeder			
150 % overload (CT/I_H, at 50 °C)			DX-LM3-005
150 % overload (CT/I_H, at 50 °C)			DX-SIN3-004
110 % overload (VT/I_L, at 40 °C)			DX-SIN3-004

Design verification as per IEC/EN 61439

Technical data for design verification			
Rated operational current for specified heat dissipation	I_n	A	2.2
Equipment heat dissipation, current-dependent	P_{vid}	W	19
IEC/EN 61439 design verification			
10.2 Strength of materials and parts			
10.2.2 Corrosion resistance			Meets the product standard's requirements.
10.2.3.1 Verification of thermal stability of enclosures			Meets the product standard's requirements.
10.2.3.2 Verification of resistance of insulating materials to normal heat			Meets the product standard's requirements.
10.2.3.3 Verification of resistance of insulating materials to abnormal heat and fire due to internal electric effects			Meets the product standard's requirements.
10.2.4 Resistance to ultra-violet (UV) radiation			Meets the product standard's requirements.
10.2.5 Lifting			Does not apply, since the entire switchgear needs to be evaluated.
10.2.6 Mechanical impact			Does not apply, since the entire switchgear needs to be evaluated.
10.2.7 Inscriptions			Meets the product standard's requirements.
10.3 Degree of protection of ASSEMBLIES			Does not apply, since the entire switchgear needs to be evaluated.
10.4 Clearances and creepage distances			Meets the product standard's requirements.
10.5 Protection against electric shock			Does not apply, since the entire switchgear needs to be evaluated.
10.6 Incorporation of switching devices and components			Does not apply, since the entire switchgear needs to be evaluated.
10.7 Internal electrical circuits and connections			Is the panel builder's responsibility.
10.8 Connections for external conductors			Is the panel builder's responsibility.
10.9 Insulation properties			
10.9.2 Power-frequency electric strength			Is the panel builder's responsibility.
10.9.3 Impulse withstand voltage			Is the panel builder's responsibility.
10.9.4 Testing of enclosures made of insulating material			Is the panel builder's responsibility.
10.10 Temperature rise			The panel builder is responsible for the temperature rise calculation. Eaton will provide heat dissipation data for the devices.
10.11 Short-circuit rating			Is the panel builder's responsibility. The specifications for the switchgear must be observed.
10.12 Electromagnetic compatibility			Is the panel builder's responsibility. The specifications for the switchgear must be observed.
10.13 Mechanical function			The device meets the requirements, provided the information in the instruction leaflet (IL) is observed.

Approvals

Product Standards			UL 508C; CSA-C22.2 No. 14; IEC/EN61800-3; IEC/EN61800-5; CE marking
UL File No.			E134360
UL Category Control No.			NMMS, NMMS2, NMMS7. NMMS8
CSA File No.			UL report applies to both US and Canada
CSA Class No.			3211-06
North America Certification			UL listed, certified by UL for use in Canada
Specially designed for North America			No
Suitable for			Branch circuits
Max. Voltage Rating			3~ 480 V AC IEC: TN-S UL/CSA: "Y" (Solidly Grounded Wey)
Degree of Protection			IEC: IP54

Dimensions

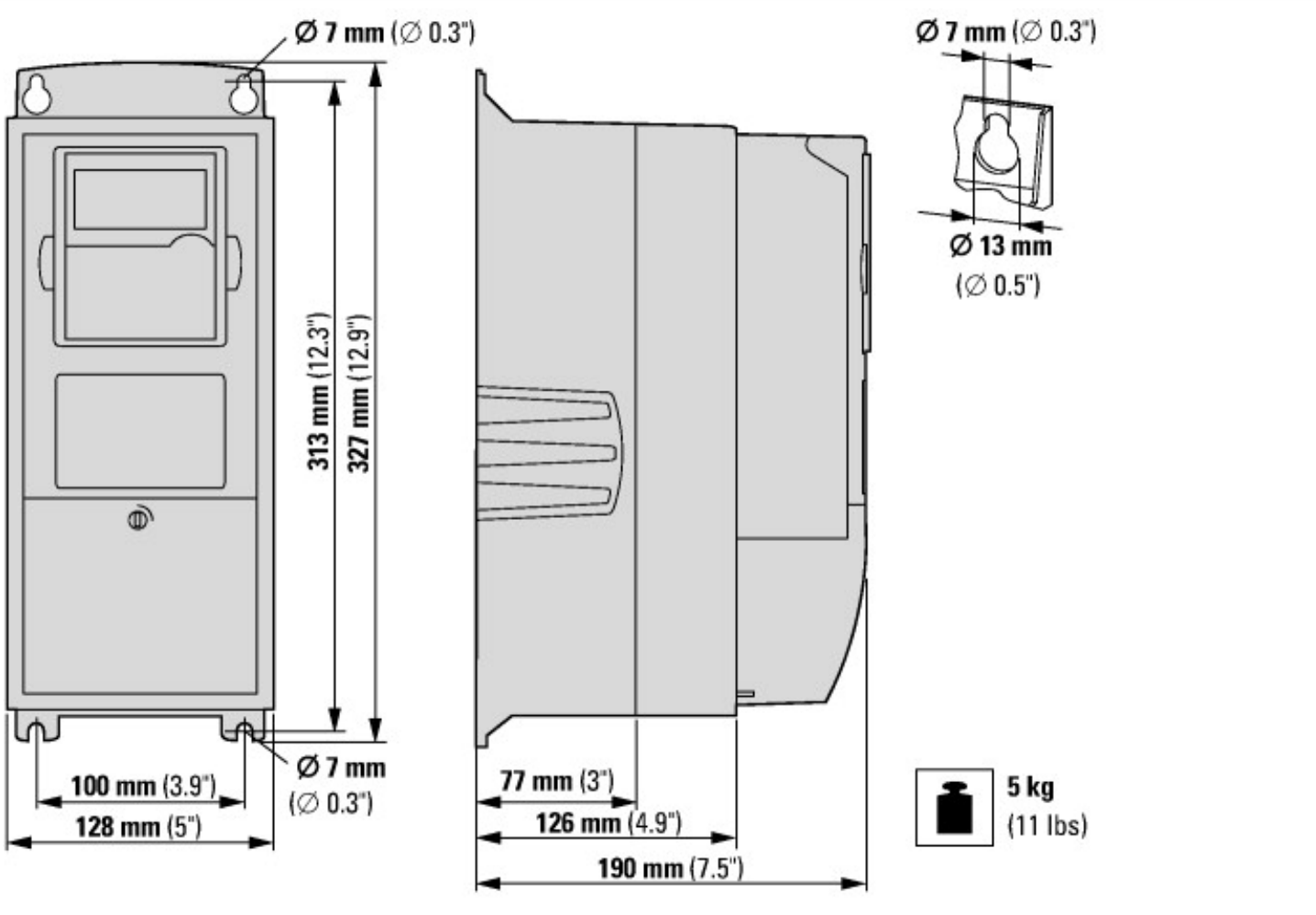

Additional product information (links)

IL04020008Z Instructions for 9000X frequency inverter: SVX, SPX	
IL04020008Z Instructions for 9000X frequency inverter: SVX, SPX	ftp://ftp.moeller.net/DOCUMENTATION/AWA_INSTRUCTIONS/IL04020008Z2012_08.pdf
MN04001004 Operating Manual for 9000X Variable Frequency Drives	
MN04001004 Bedienhandbuch Frequenzumrichter 9000X - Deutsch	ftp://ftp.moeller.net/DOCUMENTATION/AWB_MANUALS/MN04001004Z_DE.pdf
MN04004001 Application manual 9000X variable frequency drives	
MN04004001 Applikationshandbuch Frequenzumrichter 9000X - Deutsch	ftp://ftp.moeller.net/DOCUMENTATION/AWB_MANUALS/MN04004001Z_DE.pdf
CA04020001Z-DE Sortimentskatalog: Antriebstechnik effizient gestalten, Motoren starten und steuern	http://www.eaton.eu/DE/ecm/groups/public/@pub/@europe/@electrical/documents/content/pct_1095238_de.pdf

© 11/2016 by Eaton Industries GmbH